New

Single Axis Actuators SX15 Standard / Cover Type

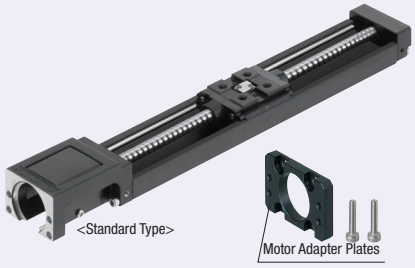

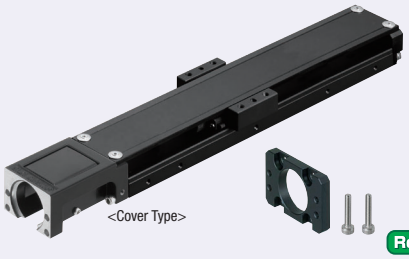

RoHS

Specifications	
SX15	
Standard / Cover	
Screw Shaft Dia. (mm)	5
Lead (mm)	2
Accuracy	High Grade • Precision Grade
A Accessories	

①Motor Adapter Plate
M A5052 S Black Anodize
②Adapter Plate Screw 2 pcs.
M SUSXM7

For Material table, see P.A-015

Part Number	Standard Grease		Low Dust Generation Grease		Lubrication Unit MX-equipped (Standard Grease)	
	High Grade	Precision Grade	High Grade	Precision Grade	High Grade	Precision Grade
Lead 2	SX1502 (C)	SX1502 (C) P	SX1502 (C) G	SX1502 (C) PG	SX1502 (C) -MX	SX1502 (C) P-MX

(C) is for Cover Type. Low Dust Generation Grease Information P.A-018 Lubrication Unit MX Information P.A-004

Standard Type

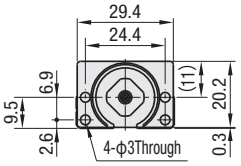

α Arrow View

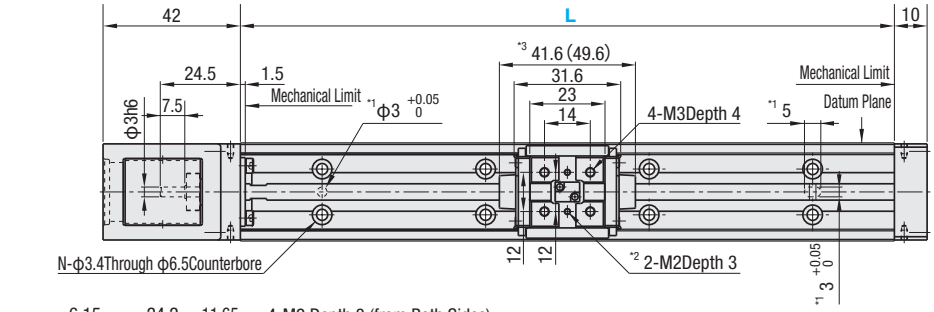

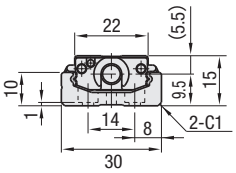

β-β Cross Section View

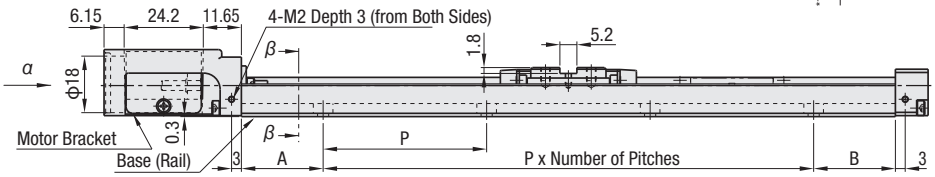

Cover Type

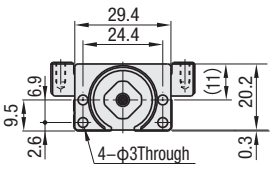

α Arrow View

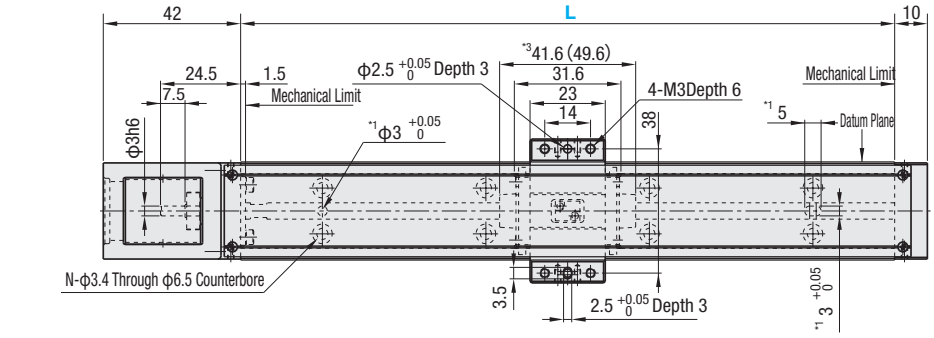

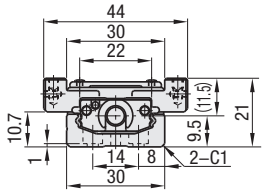

β-β Cross Section View

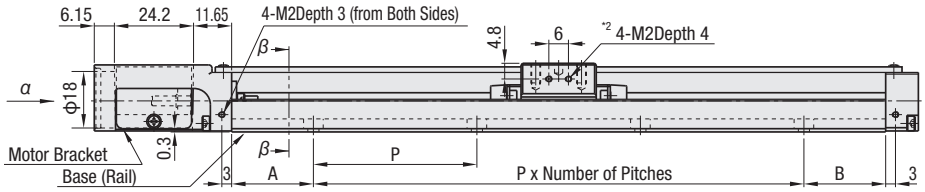

Effective stroke is the value with 2.5mm margin on each side from mechanical limits, i.e., 5mm in total.
Precision specification value is the value achieved after fixing rails. (It is not a value before tightening the rail screws.) For values, see P.A-017

*1: Dowel Holes for Base Positioning.
*2: Tapped Holes for Sensor Flag Mount.
*3: Value in ( ) is for Lubrication Unit MX-equipped Type.

Part Number		Block Qty.	Motor Adapter Plates	Base Length (L)	* Effective Stroke		Total Mass (kg)		Mounting Hole Dimensions				
High Grade	*Precision Grade				B1	MX-equipped (B1)	Standard	Cover	A	P	B	Number of Pitches	Number of Holes (N)
(Standard Grease) SX1502 (C) (Low Dust Generation Grease) SX1502 (C) G (Lubrication Unit MX-equipped, Standard Grease) SX1502 (C) -MX	(Standard Grease) SX1502 (C) P (Low Dust Generation Grease) SX1502 (C) PG (Lubrication Unit MX-equipped, Standard Grease) SX1502 (C) P-MX	(1pcs.) B1	(Servo Motor) A1525 (Stepping Motor) T1528 ST1528 UT1542 ST1542 * (No Adapter Plate) N	75	26.9	—	0.13	0.18	12.5	50	12.5	1	4
				100	51.9	43.9	0.17	0.22	25		25		
				125	76.9	68.9	0.22	0.28	12.5		12.5	2	6
				150	101.9	93.9	0.29	0.35	25		25		
				175	126.9	118.9	0.35	0.41	12.5		12.5	3	8
				200	151.9	143.9	0.38	0.45	25		25		

* Precision Certificate is enclosed with precision grade products.* Motor adapter plate and mounting screws are not included with No Adapter Plate Type.
* Effective stroke is indicated in dimensions with a margin of 2.5mm each from the ends. * (C) is for Cover Type. * 0.002kg will be added to MX-equipped types.

SURUGA SEIKI CAD 2D

New

Single Axis Actuator

A1525
Servo Stepping No Adapter
□25

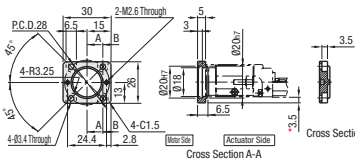

ST1528
Stepping
□28
NEMA 11

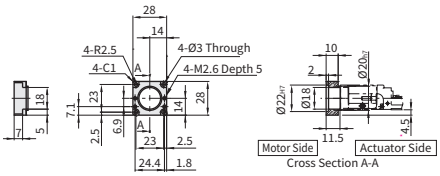

T1528
Stepping
□28
NEMA 11

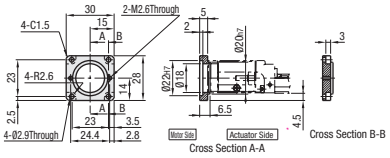

UT1542
Stepping
□42
NEMA 17

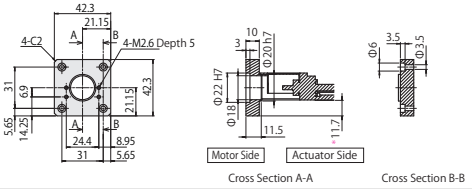

Note:Note that the Motor Adapter protrudes beyond the rail at * marked area.

ST1542
Stepping
□42
NEMA 17

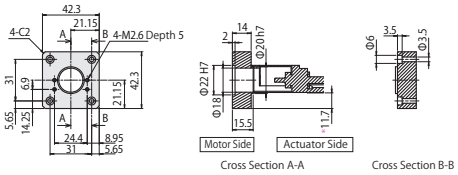

Accuracy Standards

Accuracy Standards	High Grade	Precision Grade
Positioning (mm)	0.04	0.02
Backlash (mm)	0.01	0.002
Positioning Repeatability (mm)	±0.004	±0.003
Running Parallelism (mm)	0.02	0.01
Starting Torque (N・cm)	0.8	0.8

For Max. Velocity, see P.A-001
For Moment of Inertia, see P.A-016

Servo Motor Application Table

Part Number	Flange Size	Manufacturer	Wattage
A1525	□25	YASKAWA/ Mitsubishi Electric Corporation	10W/20W

Stepping Motor Application Table

Part Number	Flange Size	Manufacturer	Type
T1528	□28	Oriental Motor	5-phase / α STEP
ST1528	□28	NEMA Standards	-
UT1542	□42		
ST1542			

NEMA standards are a set of standards stipulated by National Electrical Manufacturers, Association of United States.
For details on supported motor types, see P.A-023

Ordering Example

Part Number	-	Block Qty.	-	Motor Adapter Plates	-	Base Length (L)
SX1502C-MX	-	B1	-	A1525	-	100

Part Number	Motor Adapter Plate	Block Qty.	Lead
SX1502-B1-□	1	5	2
SX1502C-B1-□			

Option

Part Number	-	Block Qty.	-	Motor Adapter Plates	-	Base Length (L)	-	Code
SX1502	-	B1	-	A1525	-	100	-	XW1

Set of Proximity Sensor (SUNX) - Set Part Specification

SX Part Number	Code (□ is Sensor Qty.) * For L≤100, Max. 2 For L≥125, Max. 3	Sensor Qty. GX-F8A (ON when near)	Sensor Qty. GX-F8B (ON when away)	Sensor Rail Rail (1pcs.)	Sensor Rail Mounting Screw (Pitch +1 pc.)	Sensor (* Qty per Sensor Included) Sensor Mounting Screw (1 pc.)	Sensor Flag (1 pc.	Sensor Flag Sensor Flag Mounting Screw
SX1502	XA□	□pcs.	-	Dedicated	Phillips Flat Head Screw M2-4 (2 pcs.)	CBSST3-10	Dedicate	Pan Head Screw M2-3 (1pcs.)
	XB□	-	□pcs.					
SX1502C	FA□	□pcs.	-					Hex Socket Head Cap Screw M2-4 (2pcs.)
	FB□	-	□pcs.					
SX1502	XW1	1pcs.	1pcs.					Pan Head Screw M2-3 (1pcs.)
	XW2		2pcs.					
	XW3	2pcs.	1pcs.					
SX1502C	FW1	1pcs.	1pcs.					Hex Socket Head Cap Screw M2-4 (2pcs.)
	FW2		2pcs.					
	FW3	2pcs.	1pcs.					

* Sensors are not sold separately.

ProximitySensor Installation Drawing

Standard

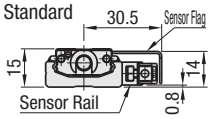

Cover

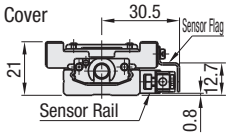

New

Single Axis Actuator

Single Axis Actuators SX20 Standard / Cover Type

Convenient Sensor Sets are also available P.A-024

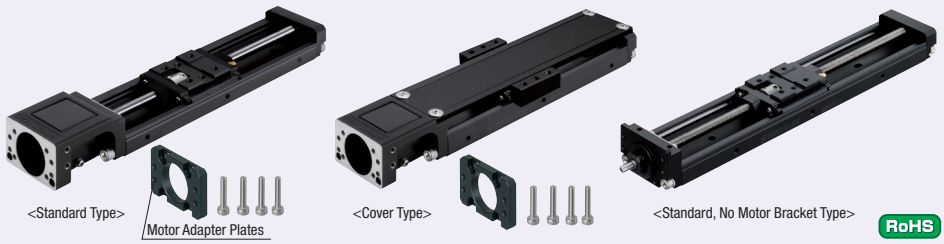

<Standard Type> <Cover Type> <Standard, No Motor Bracket Type>

RoHS

Specifications	
SX20	
Standard / Cover	
Screw Shaft Dia. (mm)	6
Lead (mm)	1, 5
Accuracy	High Grade / Precision Grade

A Accessories

①Motor Adapter Plate
M 5052 Aluminum Alloy S Black Anodize
②Adapter Plate Screw 4 pcs. M Stainless SteelXM7
No accessory is included with No Motor Bracket Type.

For Material table, see P.A-015

Part Number	Standard Grease		Low Dust Generation Grease		Lubrication Unit MX-equipped (Standard Grease)	
	High Grade	Precision Grade	High Grade	Precision Grade	High Grade	Precision Grade
Lead 1	SX2001 (C)	SX2001 (C) P	SX2001 (C) G	SX2001 (C) PG	SX2001 (C) -MX	SX2001 (C) P-MX
Lead 5	SX2005 (C)	SX2005 (C) P	SX2005 (C) G	SX2005 (C) PG	SX2005 (C) -MX	SX2005 (C) P-MX

(C) is for Cover Type.
Low Dust Generation Grease Information P.A-018
Lubrication Unit MX Information P.A-004

Standard Type

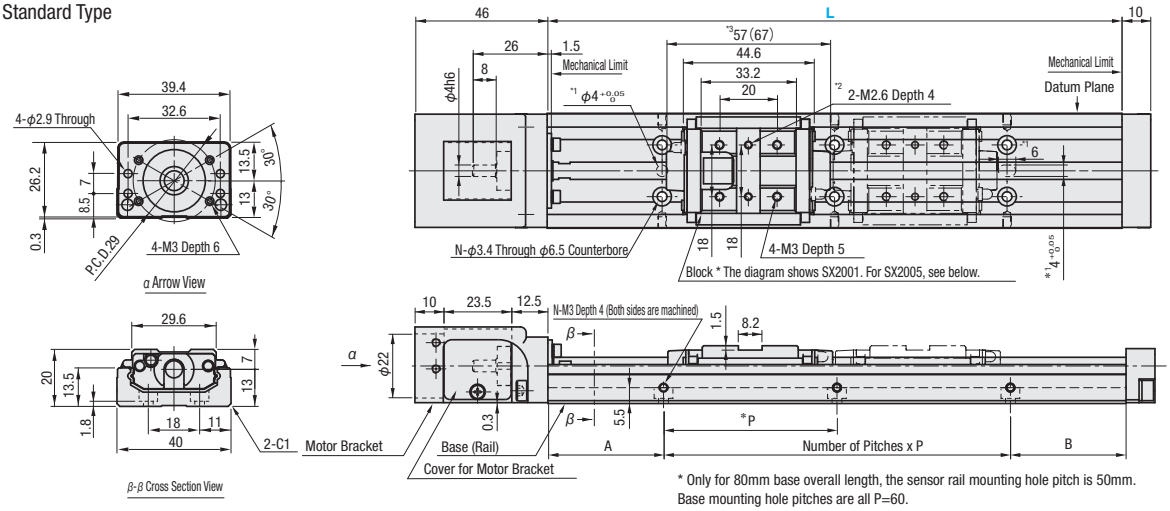

* Only for 80mm base overall length, the sensor rail mounting hole pitch is 50mm.
Base mounting hole pitches are all P=60.

Cover Type

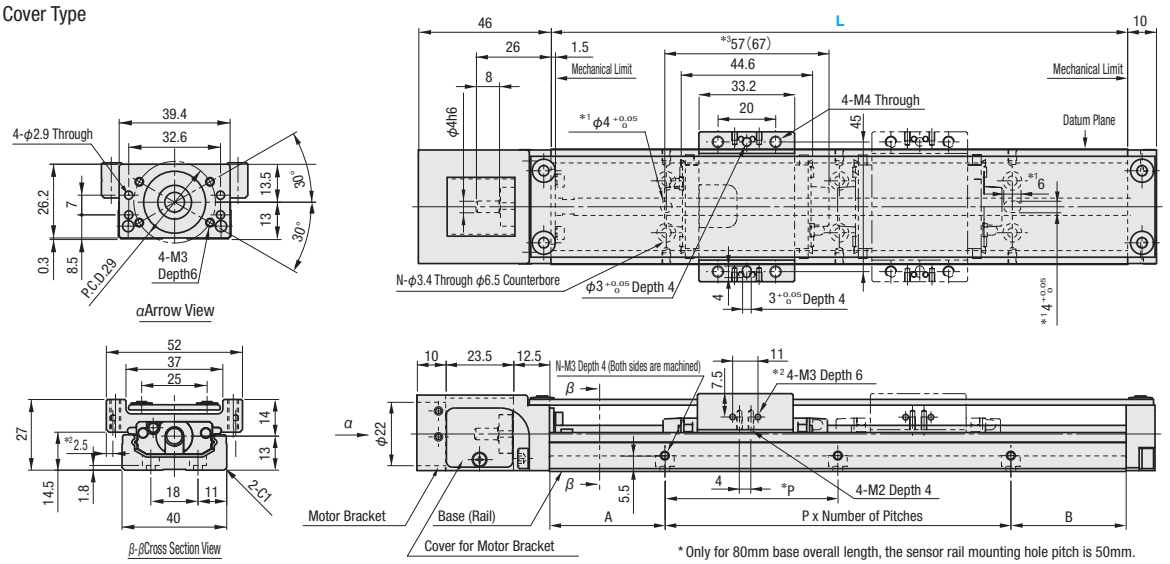

* Only for 80mm base overall length, the sensor rail mounting hole pitch is 50mm.
Base mounting hole pitches are all P=60.

Block Details of SX2005 (Standard)

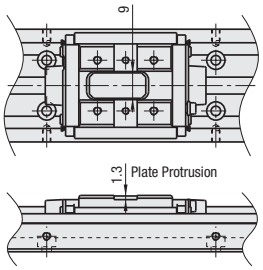

*1: Dowel Holes for Base Positioning.
*2: Tapped Holes for Sensor Flag Mount.
*3: Value in ( ) is for Lubrication Unit MX-equipped Type.

No Motor Bracket Type
* For details of the mounting parts, see P.A-023

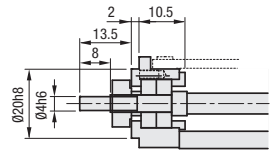

Effective stroke is the value with 2.5mm margin on each side from mechanical limits, i.e., 5mm in total.
For Double Block Type, effective strokes are the values when two blocks contact with each other.

When using SX20 No Motor Bracket Type as per the folding specifications given on P.A-037 to P.A-040, shaft may get damaged by the belt tension. Refrain from using it.
For Double Block Type, double-dashed lined blocks are not connected with the ball screw.
Precision specification value is the value achieved after fixing rails. (It is not a value before tightening the rail screws.) For values, see P.A-017

SURUGA SEIKI CAD 2D

New

Single Axis Actuator

Part Number		Block Qty.	Motor Adapter Plates	Base Length (L)	*Effective Stroke			Total Mass (kg)				Mounting Hole Dimensions				
								Standard		Cover						
High Grade	*Precision Grade				B1	B2	MX-equipped (B1)	B1	B2	B1	B2	A	P	B	Number of Pitches	Number of Holes (N)
(Standard Grease) SX2001 (C) SX2005 (C) (Low Dust Generation Grease) SX2001 (C) G SX2005 (C) G (Lubrication Unit MX-equipped, Standard Grease) SX2001 (C) -MX SX2005 (C) -MX	(Standard Grease) SX2001 (C) P SX2005 (C) P (Low Dust Generation Grease) SX2001 (C) PG SX2005 (C) PG (Lubrication Unit MX-equipped, Standard Grease) SX2001 (C) P-MX SX2005 (C) P-MX	(1 pc.) B1 * MX-equipped types are available in B1 only. (2 pcs.) B2	(Servo Motor) A2025 A2038 A2040 E2040 (Stepping Motor) T2028 T2042 T2056.4 *(No Adapter Plate) N *(No Motor Bracket) F	80 (Lead 1 only)	16.5	-	-	0.40	-	0.51	-	10	60	10	1	4
				100	36.5			0.45		0.56		20		20		
				150	86.5		76.5	0.58		0.69		15		15	2	6
				200	136.5	79.5	126.5	0.70	0.79	0.81	0.97	40		40		
				250 (Lead 5 only)	186.5	129.5	176.5	0.83	0.92	0.94	1.10	35		35	3	8
				300 (Lead 5 only)	236.5	179.5	226.5	0.96	1.05	1.07	1.23	30		30	4	10

* Precision Certificate is enclosed with precision grade products.
* Motor adapter plate and mounting screws are not included with No Adapter Plate Type.
* Effective stroke is indicated in dimensions with a margin of 2.5mm each from the ends.
* (C) is for Cover Type.

For Max. Velocity, see P.A-01
For Moment of Inertia, see P.A-016
0.004kg will be added to MX-equipped types.

Accuracy Standards

Accuracy Standards	High Grade	Precision Grade
Positioning (mm)	0.06	0.02
Backlash (mm)	0.01	0.003
Positioning Repeatability (mm)	±0.005	±0.003
Running Parallelism (mm)	0.025	0.01
Starting Torque (N・cm)	1.2	1.2

Servo Motor Application Table

Part Number	Flange Size	Manufacturer	Wattage
A2025	□25	YASKAWA Electric Corporation	10W/20W/30W/50W
		Mitsubishi Electric Corporation	10W/20W/30W
A2038	□38	Panasonic	30W/50W/100W
E2040	□40	SIEMENS	50W/100W
A2040	□40	YASKAWA Electric Corporation	50W
		Mitsubishi Electric Corporation	
		OMRON Corporation	
		Keyence Corporation	

For details on supported motor types and detailed diagram of Motor Adapter Plates, see P.A-023

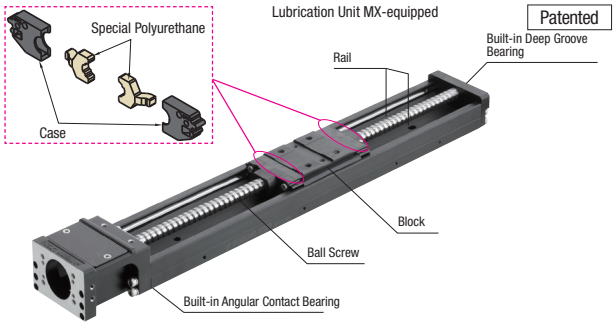

Provides long term maintenance-free operation. For details, see P.A-004

Stepping Motor Application Table

Part Number	Flange Size	Manufacturer	Type
T2028	□28	Oriental Motor	2-phase / 5-phase / α STEP
T2042	□42		
T2056.4	□56.4	NEMA Standards	-

NEMA standards are a set of standards stipulated by National Electrical Manufacturers Association of United States.
For details on supported motor types and detailed diagram of Motor Adapter Plates, see P.A-023

Ordering Example

Part Number	-	Block Qty.	-	Motor Adapter Plates	-	Base Length (L)
SX2001C	-	B1	-	A2025	-	200

Part Number	Block Qty.	Screw Shaft Dia.	Lead
SX20□□-B1-□	1	6	1 5
SX20□□-B2-□	2		
SX20□□-B1-F	1		
SX20□□-B2-F	2		
SX20□□C-B1-□	1	6	1 5
SX20□□C-B2-□	2		
SX20□□C-B1-F	1		
SX20□□C-B2-F	2		

SX20□□(C) Series sensor set can be specified as an alteration. For Detailed alteration diagram, see ☞P.A-024

New

Motor Adapter Plates/Motor Adapter Centering Tools for Single Axis Actuators SX20

SURUGA SEIKI

CAD 2D

Motor Adapter Plate Dimensional Drawing

Note:Note that the Motor Adapter protrudes beyond the rail at * marked area.

A2025
Servo
□25

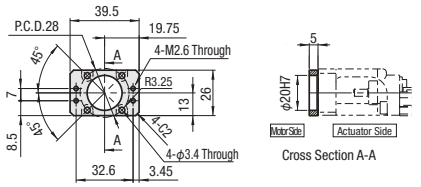

A2038
Servo
□38

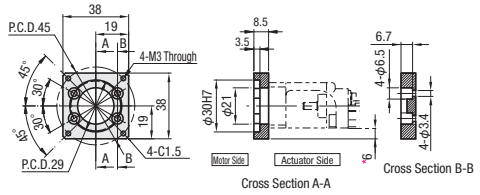

A2040
Servo
□40

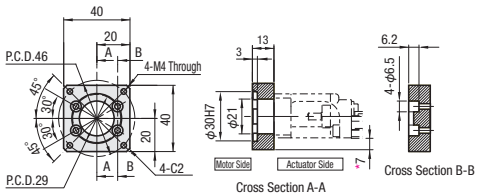

E2040
Servo
□40

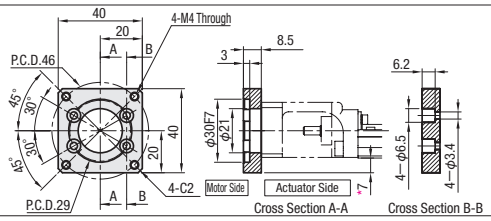

T2042
Stepping
□42
NEMA 17

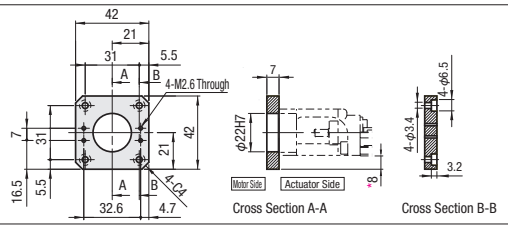

T2028
Stepping
□28
NEMA 11

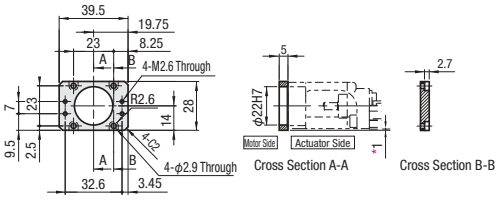

T2056.4
Stepping
□56.4
NEMA 23

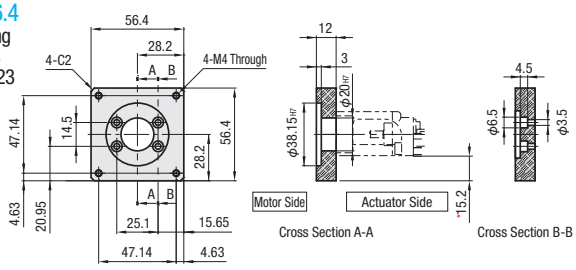

F
No Motor
Bracket Type

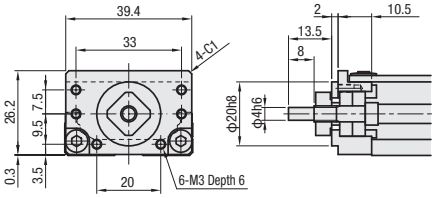

Stepping Motor Application Table

Part Number	Flange Size	Manufacturer	Product Number	Type	Recommended Coupling
T2028	□28	Oriental Motor	PKP22	2-phase	SSCPW16
			PKP52	5-phase	
			ARM2	α STEP	
T2042	□42		PK24*/PKP24	2-phase	
			RKS54*	5-phase	
			PK54		
			ARM46	α STEP	
T2056.4	□56.4	NEMA Standards	NEMA23	-	SCPDW19

NEMA standards is a set of standards stipulated by National Electrical Manufacturers Association United States.

Servo Motor Application Table

Part Number	Flange Size	Manufacturer	Product Number	Wattage	Recommended Coupling
A2025	□25	YASKAWA Electric Corporation	SGMMV-A1E	10W	SSCPW16
			SGMMV-A2E	20W	
			SGMMV-A3E	30W	
			SGMAV-A5A	50W	
		Mitsubishi Electric Corporation	HG-AK0136	10W	
			HG-AK0236	20W	
			HG-AK0336	30W	
A2038	□38	Panasonic	MSMD5A	50W	SCPDT19
			MSME5A		
			MSMD01*	100W	
			MSME01*		
A2040	□40	YASKAWA Electric Corporation	SGMJV-A5A	50W	SSCPW16 SCPDT19
			SGM7A-A5A		
		Mitsubishi Electric Corporation	HG-MR053		
			HG-KR053		
		OMRON Corporation	R88M-K05030		
		Keyence Corporation	SV-M005		
			SV2-M005A		
E2040	□40	SIEMENS	1FK7011-5	50W	SCPDW19
			1FK7015-5	100W	

Product numbers and specifications of motors are subject to change. Please check the manufactures' information.
Applicable motors and couplings are not limited to the above listed products. Please confirm each mounting dimension.

Motor Adapter Centering Tools

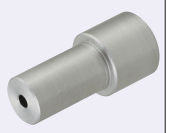

RoHS

JIGLX20

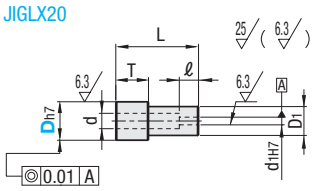

Two face milling on D part of JIGLX20-30.
Check the CAD data for detailed drawing.

M Material: 5056 Aluminum Alloy
S Surface Treatment: Clear Anodize

ex

Please use for centering of Motor Adapter Plates.

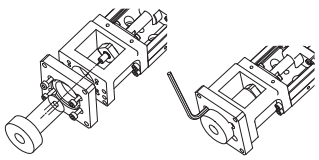

Motor Mounting Example

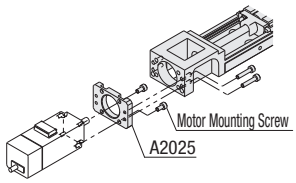

Secure included Motor Adapter to the motor.
Motor, coupling and motor mounting screws are not included.

Part Number	D	Applicable Adapter Plate	d	D1	d1	L	T	ℓ
JIGLX20	20	A2025	8	15	4	43	17	10
	30	A2038/A2040				47	13	

Ordering Example

Part Number	-	D
JIGLX20	-	20

Sensor Sets for Single Axis Actuators SX20 (Alterations)

SURUGA SEIKI CAD 2D

Proximity Sensor (SUNX) - Set Part Specification

SX Part Number	Code (□ is Sensor Qty.) * For L≤100, Max. 2 For L≥150, Max. 3	Sensor Rail		Sensor Rail		Sensor (* Qty per Sensor Included)		Sensor Flag	
		GX-F8A (ON when near)	GX-F8B (ON when away)	Rail (1 pc.)	Mounting Screw (Pitch +1 pc.)	Sensor Mounting Screw (1 pc.)	Mounting Nut (1 pc.)	Sensor Flag (1 pc.)	Sensor Flag Mounting Screw
SX20□□	XA□	□pcs.	-	SENAT3□H	SCB3-5	CBSST3-10	LBNR3	Dedicated	Flat Head Machine Screw M2.6-4 (1pc.)
	XB□	-	□pcs.						
SX20□□C	FA□	□pcs.	-						SCB3-6 (2pcs.)
	FB□	-	□pcs.						
SX20□□	XW1	1pcs.	1pcs.						Flat Head Machine Screw M2.6-4 (1pcs.)
	XW2		2pcs.						
	XW3	2pcs.	1pcs.						
SX20□□C	FW1	1pcs.	1pcs.						SCB3-6 (2pcs.)
	FW2		2pcs.						
	FW3	2pcs.	1pcs.						

Photo Sensor (SUNX) - Set Part Specification

SX Part Number	Code (□ is Sensor Qty.) * For L≤100, Max. 2 For L≥150, Max. 3	Photo Sensor	Sensor Rail		Sensor (* Qty per Sensor Included)				Sensor Flag	
			Rail (1pc.)	Mounting Screw (Pitch +1 pc.)	Sensor Bracket	Bracket Mounting Screw Nut	Sensor Mounting Screw	Sensor Mounting Washer	Sensor Flag (1 pc.)	Sensor Flag Mounting Screw
SX20□□	SP□	PM-L25	SENAT3□H	SCB3-5	Dedicated	SCB3-5 (2pcs.) LBNR3 (2pcs.)	SCB2-6 (2pcs.)	M2 Small Flat Washer (2 pcs.) M2 Spring Washer (2 pcs.)	Dedicated	Flat Head Machine Screw M2.6-4 (1pcs.)
SX20□□C	MP□									SCB3-6 (2pcs.)

Photo Sensor (OMRON) - Set Part Specification

SX Part Number	Code (□ is Sensor Qty.) * For L≤100, Max. 2 For L≥150, Max. 3	Photo Sensor	Sensor Rail		Sensor (* Qty per Sensor Included)				Sensor Flag	
			Rail (1pc.)	Mounting Screw (Pitch +1 pc.)	Sensor Bracket	Bracket Mounting Screw Nut	Sensor Mounting Screw	Sensor Mounting Washer	Sensor Flag (1 pc.)	Sensor Flag Mounting Screw
SX20□□	OP□	EE-SX951-R1M	SENAT3□H	SCB3-5	Dedicated	SCB3-5 (2pcs.) LBNR3 (2pcs.)	SCB3-6 (2pcs.)	M3 Small Flat Washer (2 pcs.)	Dedicated	Flat Head Machine Screw M2.6-4 (1pcs.)
SX20□□C	EP□									SCB3-6 (2pcs.)

*Sensors are not sold separately.

Option

Part Number	-	Block Qty.	-	Motor Adapter Plates	-	Base Length (L)	-	Code
SX2001	-	B1	-	A2025	-	200	-	XW1

Proximity Sensor Type Installation Drawings - SUNX

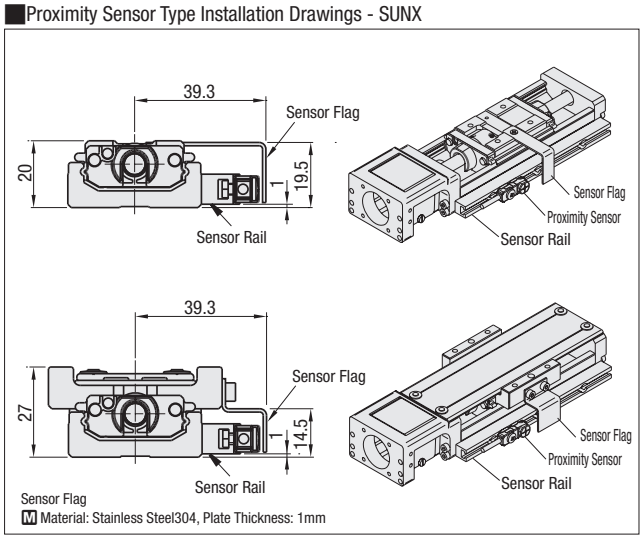

Photo Sensor Type Installation Drawings - SUNX / OMRON

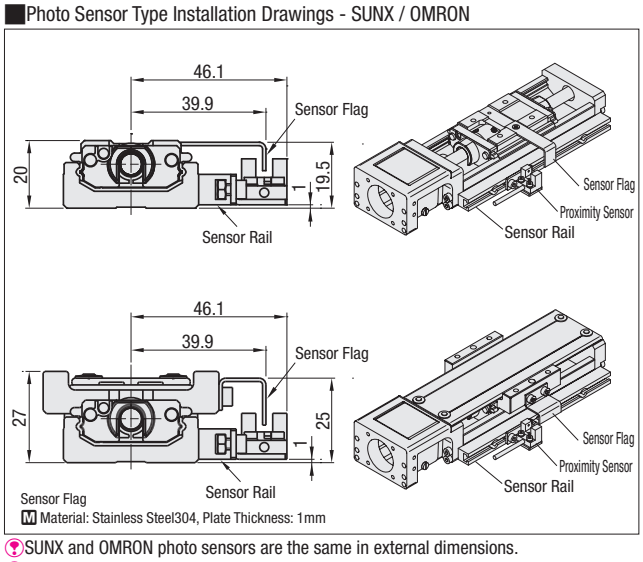

Cautions

- Sensor set is shipped with SX Actuator. Assembly required.
- Please check for all included parts immediately after unpacking. Some small parts can be lost. Please handle the products with great care.

SUNX and OMRON photo sensors are the same in external dimensions.
Please access each sensor manufacture's website for the specifications of sensors in use.

New

Single Axis Actuators SX26 Standard / Cover Type

Convenient Sensor Sets are also available. P.A-028

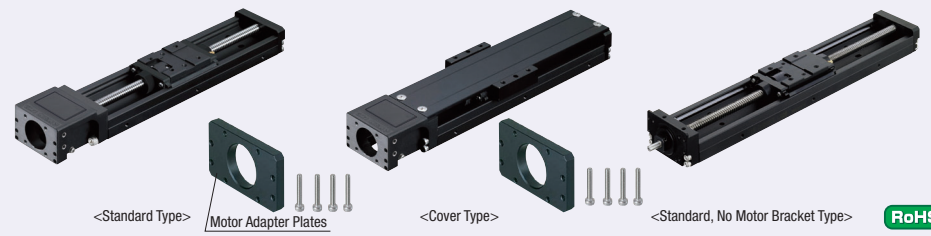

RoHS

Specifications	
SX26	
Standard / Cover	
Screw Shaft Dia. (mm)	8
Lead (mm)	2, 5, 10
Accuracy	High Grade / Precision Grade

A Accessories

①Motor Adapter Plate
M 5052 Aluminum Alloy S Black Anodize
②Adapter Plate Screw 4 pcs. M Stainless SteelXM7
No accessory is included with No Motor Bracket Type.

Material table, see P.A-015

Part Number	Standard Grease		Low Dust Generation Grease		Lubrication Unit MX-equipped (Standard Grease)	
	High Grade	Precision Grade	High Grade	Precision Grade	High Grade	Precision Grade
Lead 2	SX2602 (C)	SX2602 (C) P	SX2602 (C) G	SX2602 (C) PG	SX2602 (C) -MX	SX2602 (C) P-MX
Lead 5	SX2605 (C)	SX2605 (C) P	SX2605 (C) G	SX2605 (C) PG	SX2605 (C) -MX	SX2605 (C) P-MX
Lead 10	SX2610 (C)	SX2610 (C) P	SX2610 (C) G	SX2610 (C) PG	SX2610 (C) -MX	SX2610 (C) P-MX

(C) is for Cover Type.
Low Dust Generation Grease Information P.A-018
Lubrication Unit MX Information P.A-004

Standard Type

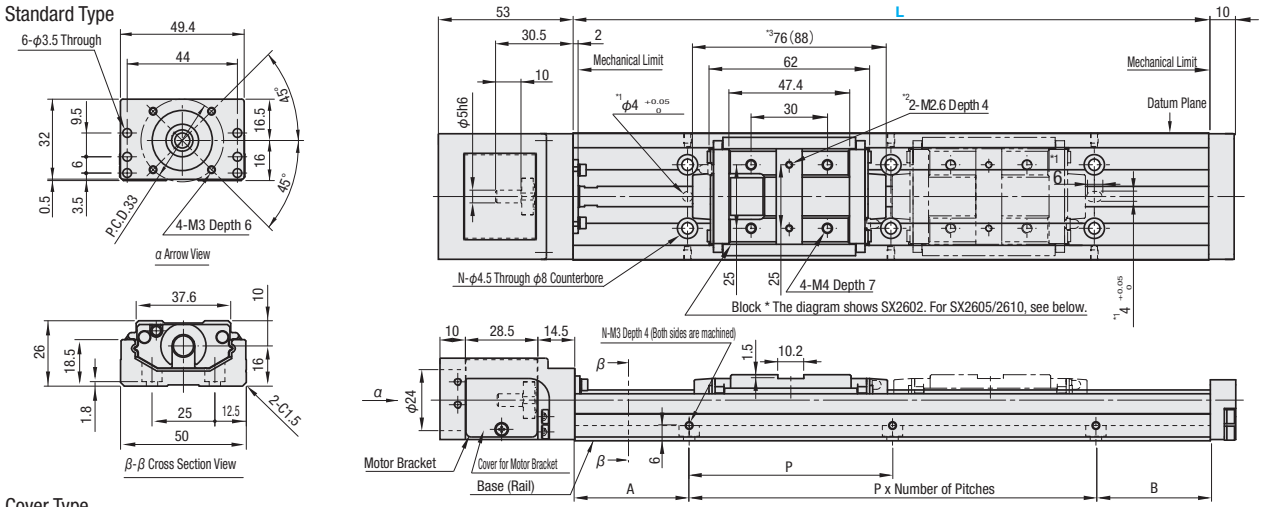

Cover Type

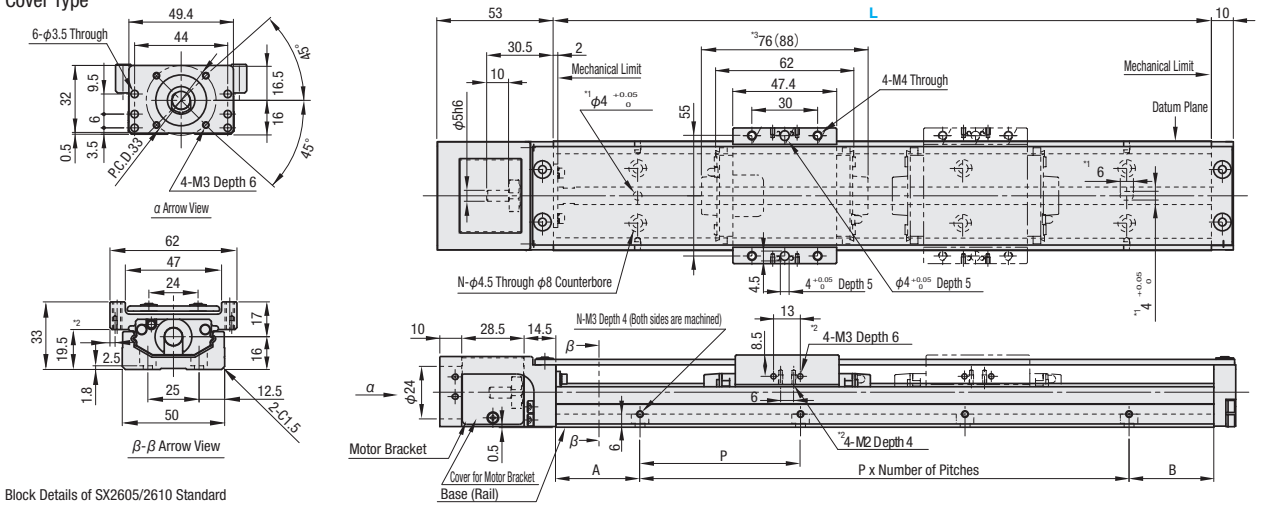

Block Details of SX2605/2610 Standard

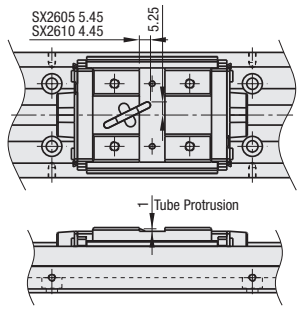

*1: Dowel Holes for Base Positioning.
*2: Tapped Holes for Sensor Flag Mount.
*3: Value in ( ) is for Lubrication Unit MX-equipped Type.

No Motor Bracket Type
*For details of the mounting parts, see P.A-027

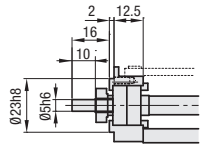

Effective stroke is the value with 2.5mm margin on each side from mechanical limits, i.e., 5mm in total.
For Double Block Type, effective strokes are the values when two blocks contact with each other.
When using SX26 No Motor Bracket Type as per the folding specifications given on P.A-025 to P.A-040, shaft may be damaged by the belt tension. Refrain from using it.
For Double Block Type, double-dashed lined blocks are not connected with the ball screw.
Precision specification value is the value achieved after fixing rails. (It is not a value before tightening the rail screws.) For values, see P.A-017

SURUGA SEIKI CAD 2D

New

Single Axis Actuator

Part Number: High Grade	Part Number: *Precision Grade	Block Qty.	Motor Adapter Plates	Base Length (L)	*Effective Stroke: B1	*Effective Stroke: B2	*Effective Stroke: MX-equipped (B1)	Total Mass (kg) Standard: B1	Total Mass (kg) Standard: B2	Total Mass (kg) Cover: B1	Total Mass (kg) Cover: B2	Mounting Hole Dimensions: A	Mounting Hole Dimensions: P	Mounting Hole Dimensions: B	Mounting Hole Dimensions: Number of Pitches	Mounting Hole Dimensions: Number of Holes (N)
(Standard Grease) SX2602 (C) SX2605 (C) SX2610 (C) (Low Dust Generation Grease) SX2602 (C) G SX2605 (C) G SX2610 (C) G (Lubrication Unit MX-equipped, Standard Grease) SX2602 (C) -MX SX2605 (C) -MX SX2610 (C) -MX	(Standard Grease) SX2602 (C) P SX2605 (C) P SX2610 (C) P (Low Dust Generation Grease) SX2602 (C) PG SX2605 (C) PG SX2610 (C) PG (Lubrication Unit MX-equipped, Standard Grease) SX2602 (C) P-MX SX2605 (C) P-MX SX2610 (C) P-MX	(1 pc.) B1 *Lubrication Units MX-equipped types and Lead 10 are available in B1 only. (2 pcs.) B2	(Servo Motor) A2625 A2638 A2640 E2640 (Stepping Motor) T2628 T2642 T2656.4 *(No Adapter Plate) N *(No Motor Bracket) F	100 (Lead 2 only)	17	-	-	0.87	-	1.07	-	10	80	10	1	4
				150	67			0.95		1.15		35		35		
				200	117		105	1.16		1.36		20		20	2	6
				250	167	91	155	1.37	1.57	1.57	1.89	45		45		
				300	217	141	205	1.58	1.78	1.78	2.10	30		30	3	8
				350 (Lead 5 and 10 only)	267	191	255	1.79	1.99	1.99	2.31	15		15	4	10
				400 (Lead 5 and 10 only)	317	241	305	2.00	2.20	2.20	2.52	40		40		

* Precision Certificate is enclosed with precision grade products.
* Motor adapter plate and mounting screws are not included with No Adapter Plate Type.
* Effective stroke is indicated in dimensions with a margin of 2.5mm each from the ends.
* (C) is for Cover Type.
For Max. Velocity, see P.A-017
For Moment of Inertia, see P.A-016
0.007kg will be added to MX-equipped types.

Accuracy Standards

Accuracy Standards	High Grade	Precision Grade
Positioning (mm)	0.06	0.02
Backlash (mm)	0.01	0.003
Positioning Repeatability (mm)	±0.005	±0.003
Running Parallelism (mm)	0.025	0.01
Starting Torque (N・cm)	2	2

Servo Motor Application Table

Part Number	Flange Size	Manufacturer	Wattage
A2625	□25	YASKAWA / Mitsubishi Electric Corporation	10W/20W/30W
A2638	□38	Panasonic	50W/100W
E2640	□40	SIEMENS	
A2640		YASKAWA Electric Corporation	50W
		Mitsubishi Electric Corporation	
		Keyence Corporation	
		OMRON Corporation	

Shaft insertion depth on coupling will be 0.5mm shorter on each side when used with Siemens motor.
For details on supported motor types and detailed diagram of Motor Adapter Plates, see P.A-027

Stepping Motor Application Table

Part Number	Flange Size	Manufacturer	Type
T2628	□28	Oriental Motor	2-phase / 5-phase / α STEP
T2642	□42		
T2656.4	□56.4	NEMA Standards	-

NEMA Standards are a set of standards stipulated by National Electrical Manufacturers Association of United States.
For details on supported motor types and detailed diagram of Motor Adapter Plates, see P.A-027

Ordering Example

Part Number	-	Block Qty.	-	Motor Adapter Plates	-	Base Length (L)
SX2602C	-	B1	-	A2640	-	300
SX2605-MX	-	B1	-	A2638	-	200

Lubrication Unit MX-equipped

Patented

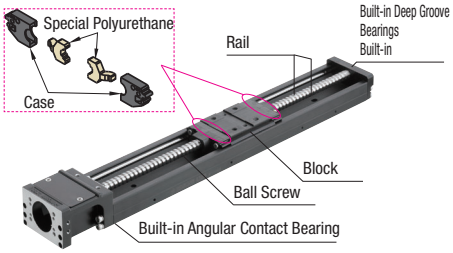

Provides long term maintenance-free operation.
For details, see P.A-004

Part Number	Block Qty.	Screw Shaft Dia.	Lead
SX26□□-B1-□	1	8	2
SX26□□-B2-□	2		5
SX26□□-B1-F	1		10
SX26□□-B2-F	2		
SX26□□C-B1-□	1	8	2
SX26□□C-B2-□	2		5
SX26□□C-B1-F	1		10
SX26□□C-B2-F	2		

Lead 10 is available for selection only in case of B1 (Block 1 pc.)
SX26□□(C) Series sensor set can be specified as an alteration. For Detailed alteration diagram, see P.A-028

New

Motor Adapter Plates / Motor Adapter Centering Tools For Single Axis Actuators SX26

SURUGA SEIKI

CAD 2D

Motor Adapter Plate Dimensional Drawing

Note:Note that the Motor Adapter protrudes beyond the rail at * marked area.

A2625
Servo
□25

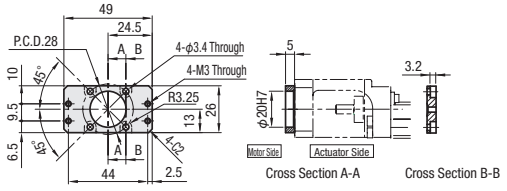

A2638
Servo
□38

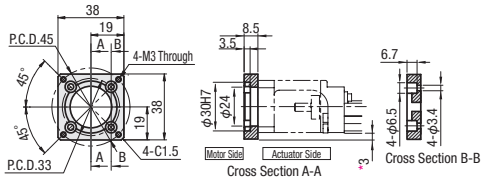

A2640
Servo
□40

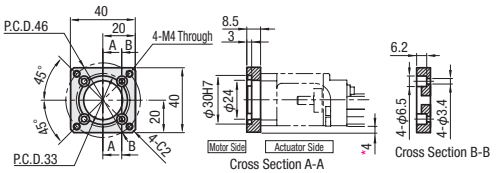

E2640
Servo
□38

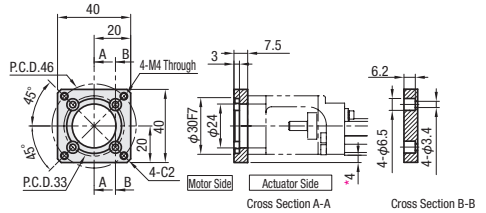

T2628
Stepping
□28
NEMA 11

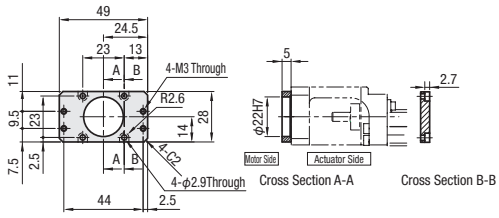

T2642
Stepping
□42
NEMA 17

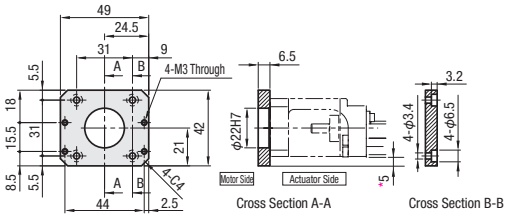

T2656.4
Stepping
□56.4
NEMA 23

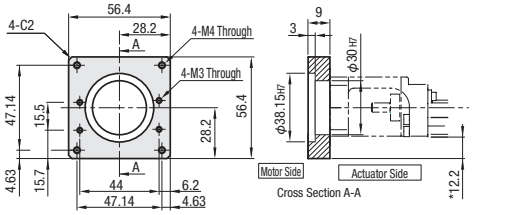

F
No Motor
Bracket Type

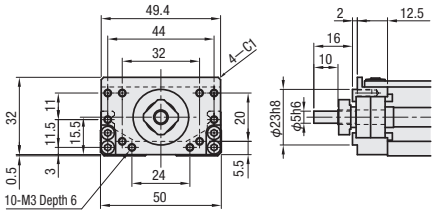

Stepping Motor Application Table

Part Number	Flange Size	Manufacturer	Product Number	Type	Recommended Coupling
T2628	□28	Oriental Motor	PKP22	2-phase	SSCXW21 SSCPW21 SCPDW19
			PKP52	5-phase	
			ARM2	α STEP	
T2642	□42		PK24*/PKP24	2-phase	
			RKS54*	5-phase	
			PK54		
			ARM46	α STEP	
T2656.4	□56.4	NEMA Standards	NEMA23	-	SCPDW19

NEMA Standards is a set of standards stipulated by National Electrical Manufacturers Association of United States.

Servo Motor Application Table

Part Number	Flange Size	Manufacturer	Product Number	Wattage	Recommended Coupling
A2625	□25	YASKAWA Electric Corporation	SGMMV-A1E	10W	SSCXW21 SSCPW21 SCPDW19
			SGMMV-A2E	20W	
			SGMMV-A3E	30W	
		Mitsubishi Electric Corporation	HG-AK0136	10W	
			HG-AK0236	20W	
			HG-AK0336	30W	
A2638	□38	Panasonic	MSMD5A	50W	
			MSME5A		
			MSMD01*	100W	
			MSME01*		
A2640	□40	YASKAWA Electric Corporation	SGMJV-A5A	50W	
			SGM7A-A5A		
			SGMAV-A5A		
		Mitsubishi Electric Corporation	HG-MR053		
			HG-KR053		
		OMRON Corporation	R88M-K05030		
		Keyence Corporation	SV-M005		
			SV2-M005A		
E2640	□40	SIEMENS	1FK7011-5	50W	SCPDW19
			1FK7015-5	100W	

Shaft insertion depth on coupling will be 0.5mm shorter on each side when used with Siemens motor.
Product numbers and specifications of motors are subject to change. Please check the manufactures' information.
Applicable motors and couplings are not limited to the above listed products. Please confirm each mounting dimension.

Motor Adapter Centering Tools

RoHS

JIGLX26

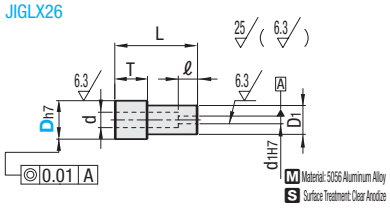

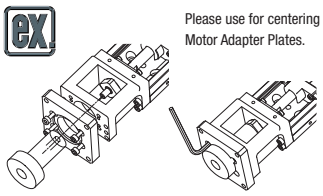

Please use for centering of Motor Adapter Plates.

Motor Mounting Example

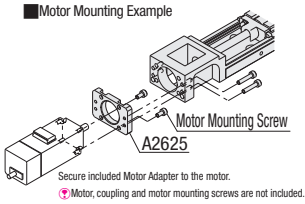

Secure included Motor Adapter to the motor.
Motor, coupling and motor mounting screws are not included.

Part Number	D	Applicable Adapter Plate	d	D1	d1	L	T	ℓ
JIGLX26	30	A2638/A2640/T2656.4	8	15	5	49.5	13	11

Ordering Example

Part Number	-	D
JIGLX26	-	20

Sensor Sets For Single Axis Actuators SX26 (Options)

SURUGA SEIKI CAD 2D

New

Proximity Sensor (SUNX) - Set Part Specification

SX Part Number	Code (□ is Sensor Qty.) * For L≤100, Max. 2 For L≥150, Max. 3	Sensor Rail		Sensor Rail		Sensor (* Qty per Sensor Included)		Sensor Flag	
		GX-F8A (ON when near)	GX-F8B (ON when away)	Rail (1 pc.)	Mounting Screw (Pitch +1 pc.)	Sensor Mounting Screw (1 pc.)	Mounting Nut (1 pc.)	Sensor Flag (1 pc.)	Sensor Flag Mounting Screw
SX26□□	XA□	□pc(s).	-	SENAT3□H	SCB3-5	CBSST3-10	LBNR3	Dedicated	Flat Head Machine Screw M2.6-4(1 pc.)
	XB□	-	□pc(s).						
SX26□□C	FA□	□pc(s).	-						SCB3-6 (2 pcs.)
	FB□	-	□pc(s).						
SX26□□	XW1	1 pc.	1 pc.						Flat Head Machine Screw M2.6-4(1 pc.)
	XW2		2 pcs.						
	XW3	2 pcs.	1 pc.						
SX26□□C	FW1	1 pc.	1 pc.						SCB3-6 (2 pcs.)
	FW2		2 pcs.						
	FW3	2 pcs.	1 pc.						

Photo Sensor (SUNX) - Set Part Specification

SX Part Number	Code (□ is Sensor Qty.) * For L≤100, Max. 2 For L≥150, Max. 3	Photo Sensor	Sensor Rail		Sensor (* Qty per Sensor Included)				Sensor Flag	
			Rail (1pc.)	Mounting Screw (Pitch +1 pc.)	Sensor Bracket	Bracket Mounting Screw Nut	Sensor Mounting Screw	Sensor Mounting Washer	Sensor Flag (1 pc.)	Sensor Flag Mounting Screw
SX26□□	SP□	PM-L25	SENAT3□H	SCB3-5	Dedicated	SCB3-5 (2 pcs.) LBNR3 (2 pcs.)	SCB2-6 (2 pcs.)	M2 Small Flat Washer (2 pcs.) M2 Spring Washer (2 pcs.)	Dedicated	Flat Head Machine Screw M2.6-4 (1 pc.)
SX26□□C	MP□									SCB3-6 (2 pcs.)

Photo Sensor (Omron) - Set Part Specification

SX Part Number	Code (□ is Sensor Qty.) * For L≤100, Max. 2 For L≥150, Max. 3	Photo Sensor	Sensor Rail		Sensor (* Qty per Sensor Included)				Sensor Flag	
			Rail (1pc.)	Mounting Screw (Pitch +1 pc.)	Sensor Bracket	Bracket Mounting Screw Nut	Sensor Mounting Screw	Sensor Mounting Washer	Sensor Flag (1 pc.)	Sensor Flag Mounting Screw
SX26□□	OP□	EE-SX951-R1M	SENAT3□H	SCB3-5	Dedicated	SCB3-5 (2 pcs.) LBNR3 (2 pcs.)	SCB3-6 (2 pcs.)	Small Flat Washer (2 pcs.)	Dedicated	Flat Head Machine Screw M2.6-4 (1 pc.)
SX26□□C	EP□									SCB3-6 (2 pcs.)

* Sensors are not sold separately.

Option

Part Number	-	Block Qty.	-	Motor Adapter Plates	-	Base Length (L)	-	Code
SX2605C	-	B1	-	A2638	-	200	-	MP2

Proximity Sensor Type Installation Drawings - SUNX

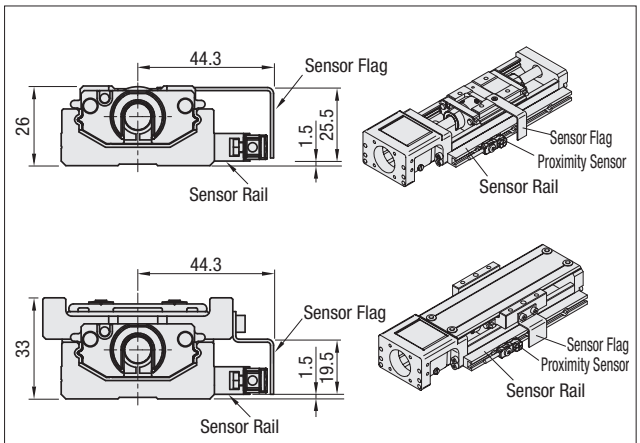

Sensor Flag
M Material: Stainless Steel304, Plate Thickness: 1mm

Photo Sensor Type Installation Drawings - SUNX / OMRON

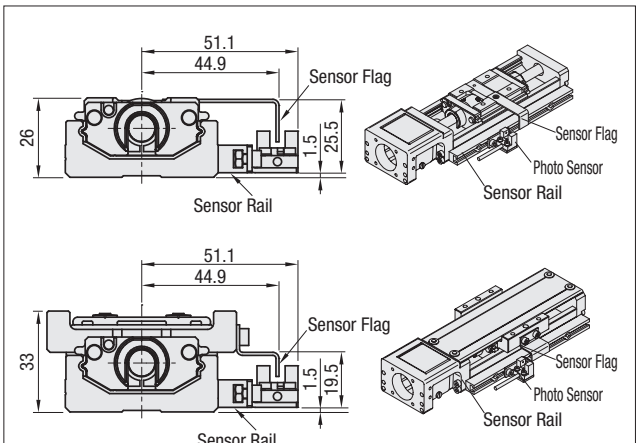

Sensor Flag
M Material: Stainless Steel304, Plate Thickness: 1mm

Cautions

- Sensor set is shipped with SX Actuator. Assembly required.
- Please check for all included parts immediately after unpacking. Some small parts can be lost. Please handle the products with great care.

SUNX and OMRON photo sensors are the same in external dimensions.
Please access each sensor manufacture's website for the specifications of sensors in use.

New

Single Axis Actuator

Single Axis Actuators SX30 Standard / Cover Type

Convenient Sensor Sets are also available. P.A-032

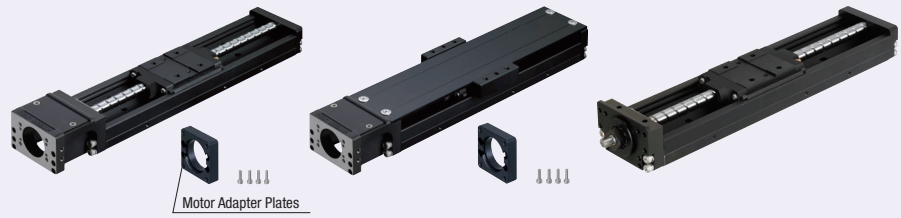

<Standard Long Block Type> <Long Blocks with Cover> <Standard No Motor Bracket Type>

RoHS

Specifications	
SX30	
Standard / Cover	
Screw Shaft Dia. (mm)	10
Lead (mm)	5, 10
Accuracy	High Grade / Precision Grade

A Accessories

① Motor Adapter Plates
M 5052 Aluminum Alloy S Black Anodize
② Adapter Plate Screw 4 pcs. M 302HQ Stainless Steel
No accessory is included for No Motor Bracket Type.

For Materials Table, see P.A-015

Part Number	Standard Grease		Low Dust Generation Grease		Lubrication Unit MX-equipped (Standard Grease)	
	High Grade	Precision Grade	High Grade	Precision Grade	High Grade	Precision Grade
Lead 5	SX3005 (C)	SX3005 (C) P	SX3005 (C) G	SX3005 (C) PG	SX3005 (C) -MX	SX3005 (C) P-MX
Lead 10	SX3010 (C)	SX3010 (C) P	SX3010 (C) G	SX3010 (C) PG	SX3010 (C) -MX	SX3010 (C) P-MX

(C) is for Cover Type. Low Particle Grease Information P.A-018 Lubrication Unit MX Information P.A-004

Standard Short Block Type

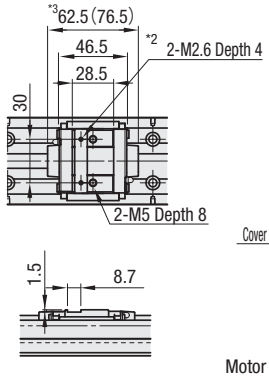

Standard Long Block Type

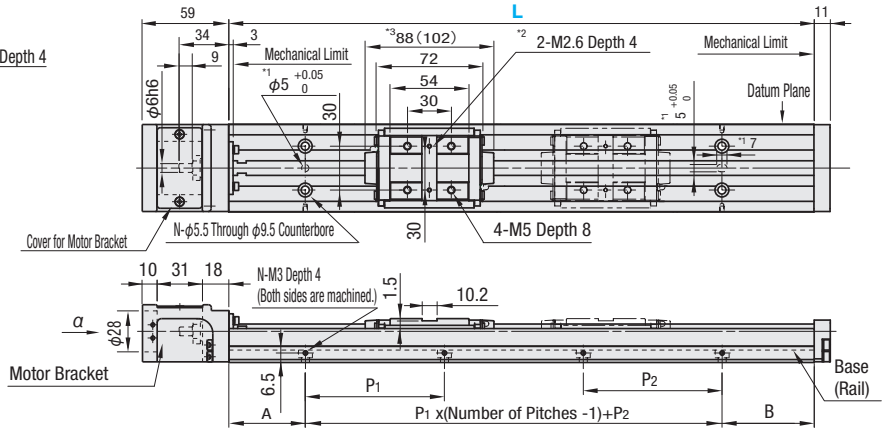

Short Blocks with Cover

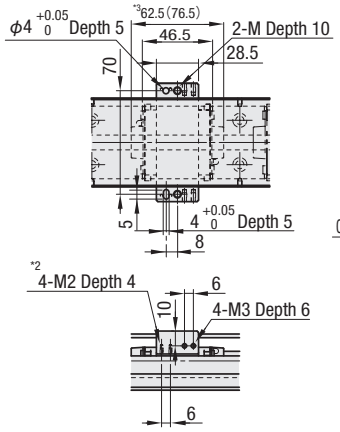

Long Blocks with Cover

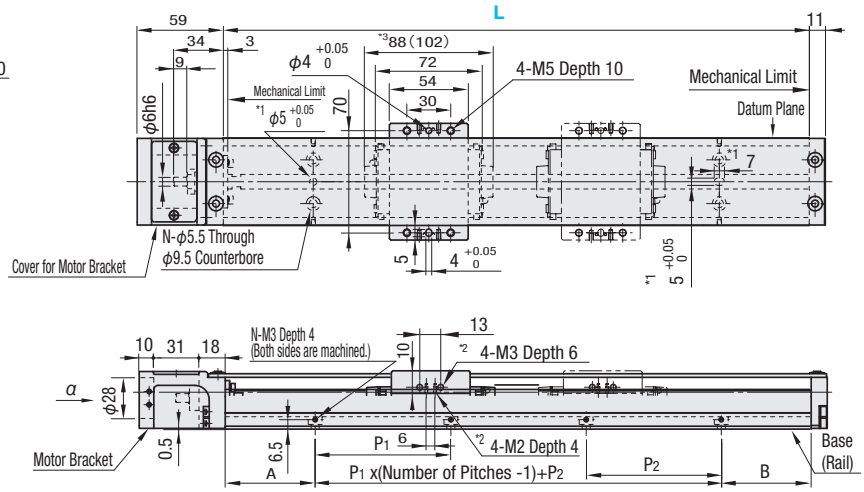

Standard Type

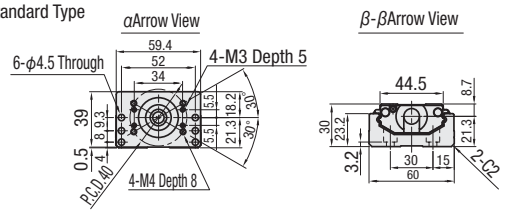

Cover Type

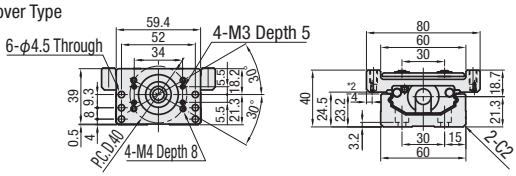

*1: Dowel Holes for Base Positioning.
*2: Tapped Holes for Sensor Flag Mount.
*3: Value in ( ) is for Lubrication Unit MX-equipped Type.

Effective stroke is the value with 2.5mm margin on each side from mechanical limits, i.e., 5mm in total.
For Double Block Type, double-dashed lined blocks are not connected with the ball screw.
For Double Block Type, effective strokes are the values when two blocks contact with each other.

No Motor Bracket Type

*For mounting details, see P.A-031

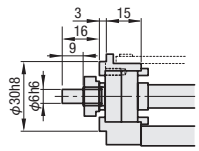

SURUGA SEIKI CAD 2D

New

Single Axis Actuator

Part Number		Block Qty.	Motor Adapter Plates	Base Length (L)	Mounting Hole Dimensions					
High Grade	*Precision Grade				A	P1	P2	B	Number of Pitches	Number of Holes (N)
(Standard Grease) SX3005 (C) SX3010 (C)	(Standard Grease) SX3005 (C) P SX3010 (C) P	Long Blocks (1 pc.)B1 (2 pcs.)B2 For B2, L≥300.	(Servo) A3038 A3040 E3040	125	12.5	-	100	12.5	1	4
				150	25			25		
				200	50	100		50		
(Low Particle Grease) SX3005 (C) G SX3010 (C) G	(Low Particle Grease) SX3005 (C) PG SX3010 (C) PG		(Stepping) T3042 T3056.4 T3060	250			50		2	6
				300			100			
		Short Blocks (1 pc.)S1 (2 pcs.)S2 *Lubrication Units MX-equipped types are available in B1/S1 only		350			50		3	8
				400			100			
(Lubrication Unit MX-equipped, Standard Grease) SX3005 (C) -MX SX3010 (C) -MX	(Lubrication Unit MX-equipped, Standard Grease) SX3005 (C) P-MX SX3010 (C) P-MX		*(No Adapter Plate) N (Without Motor Bracket) F	450			50		4	10
				500			100			
				550			50		5	12
				600			100			

*Precision Certificate is enclosed with precision grade products. *(C) is for Cover Type.
*Motor adapter plate and mounting screws are not included with No Adapter Plate Type.

Servo Motor Application Table

Part Number	Flange Size	Manufacturer	Wattage
A3038	□38	Panasonic	50W/100W
E3040	□40	SIEMENS	
A3040		YASKAWA Electric Corporation	
		Mitsubishi Electric Corporation	
		Keyence Corporation	
		OMRON Corporation	

Shaft length in coupling will be 1.15mm shorter on each side when used with Siemens motor.
For details on supported motor types and detailed diagram of Motor Adapter Plates, see P.A-031

Stepping Motor Application Table

Part Number	Flange Size	Manufacturer	Type
T3042	□42	Oriental Motor	2-phase / 5-phase / α STEP
T3060	□60		
T3056.4	□56.4		2-phase
		NEMA Standards	-

NEMA Standards are a set of standards stipulated by National Electrical Manufacturers Association of United States.
For details on supported motor types and detailed diagram of Motor Adapter Plates, see P.A-031

Effective Stroke / Total Mass

Base Length (L)	*Effective Stroke						Total Mass (kg)							
	MX-unequipped				MX-equipped		Standard				Cover			
	B1	B2	S1	S2	B1	S1	B1	B2	S1	S2	B1	B2	S1	S2
125	29	-	54.5	-	-	-	1.30	-	1.18	-	1.75	-	1.50	-
150	54	-	79.5	17	-	65.5	1.47	-	1.35	1.53	1.92	-	1.67	1.98
200	104	-	129.5	67	90	115.5	1.81	-	1.68	1.86	2.25	-	2	2.32
250	154	-	179.5	117	140	165.5	2.14	-	2.02	2.2	2.59	-	2.34	2.66
300	204	116	229.5	167	190	215.5	2.48	2.79	2.35	2.53	2.92	3.49	2.67	2.99
350	254	166	279.5	217	240	265.5	2.81	3.12	2.69	2.87	3.26	3.83	3.01	3.33
400	304	216	329.5	267	290	315.5	3.15	3.46	3.02	3.21	3.6	4.16	3.35	3.66
450	354	266	379.5	317	340	365.5	3.49	3.79	3.36	3.54	3.93	4.5	3.68	4
500	404	316	429.5	367	390	415.5	3.82	4.13	3.7	3.88	4.27	4.83	4.02	4.33
550	454	366	479.5	417	440	465.5	4.16	4.47	4.03	4.21	4.6	5.17	4.35	4.67
600	504	416	529.5	467	490	515.5	4.49	4.8	4.37	4.55	4.94	5.51	4.69	5.01

*Effective stroke is indicated in dimensions with a margin of 2.5 mm each from the ends. MX-equipped types are +0.011kg.

Accuracy Standards

Accuracy Standards	L≤400		L≥450	
	High Grade	Precision Grade	High Grade	Precision Grade
Positioning (mm)	0.06	0.02	0.1	0.025
Backlash (mm)	0.02	0.003	0.02	0.003
Positioning Repeatability (mm)	±0.005	±0.003	±0.005	±0.003
Running Parallelism (mm)	0.025	0.01	0.035	0.015
Starting Torque (N・cm)	4			

See P.A-017 for Maximum Velocity.
See P.A-016 for Moment of Inertia.

Ordering Example

Part Number	-	Block Qty.	-	Motor Adapter Plates	-	Base Length (L)
SX3010C	-	B1	-	A3040	-	600
SX3010-MX	-	B1	-	A3040	-	600

Part Number	Block Qty.	Screw Shaft Dia.	Lead
SX30□□-B1/S1-□	1	10	5
SX30□□-B2/S2-□	2		
SX30□□-B1/S1-F	1		10
SX30□□-B2/S2-F	2		
SX30□□C-B1/S1-□	1	10	5
SX30□□C-B2/S2-□	2		
SX30□□C-B1/S1-F	1		10
SX30□□C-B2/S2-F	2		

SX30□□(C) Series sensor set can be specified as an alteration. For Detailed alteration diagram, see P.A-032

Lubrication Unit MX-equipped

Patented

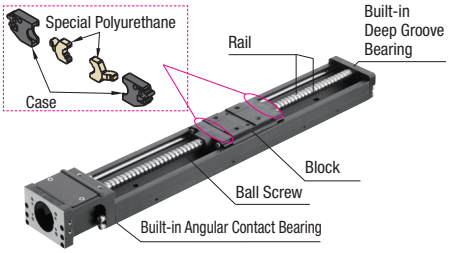

Provides long term maintenance-free operation. For details, see P.A-004

New

Motor Adapter Plates / Motor Adapter Centering Tools For Single Axis Actuators SX30

SURUGA SEIKI

CAD 2D

Note: Note that the Motor Adapter protrudes beyond the rail at *marked area.

A3038

Servo Stepping □38

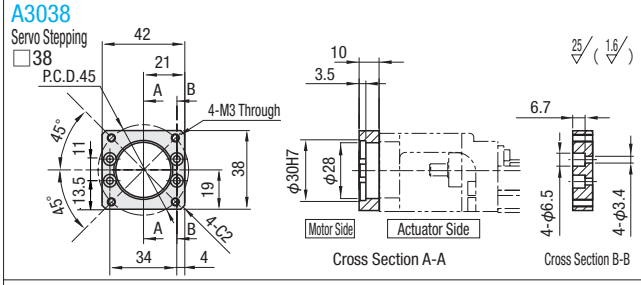

A3040

Servo Stepping □40

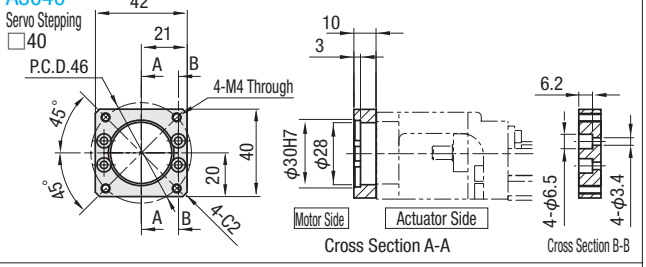

E3040

Servo Stepping □40

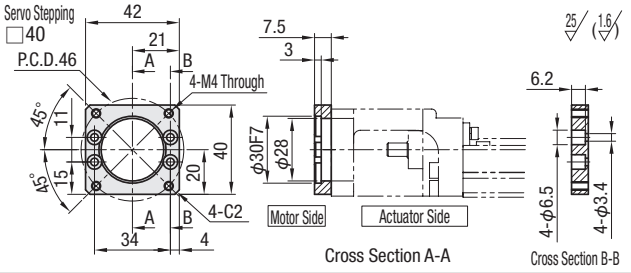

T3042

Stepping □42 NEMA 17

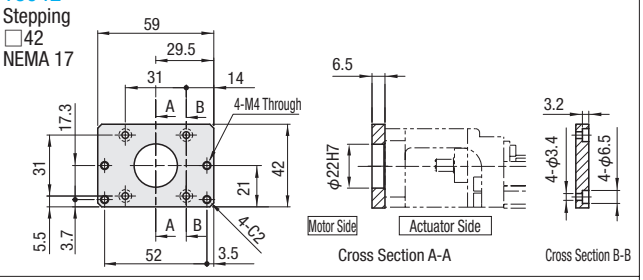

T3056.4

Stepping □56.4 NEMA 23

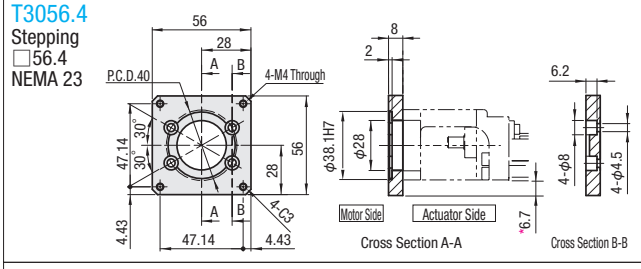

T3060

Stepping □60

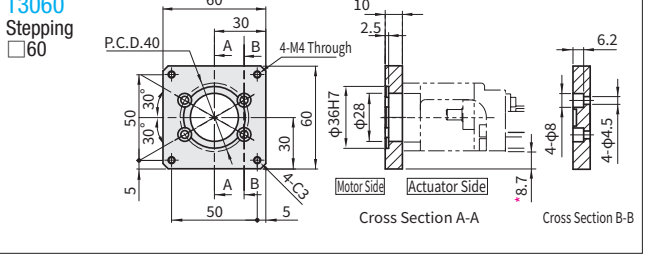

F

Motor Bracket No Motor Bracket Type

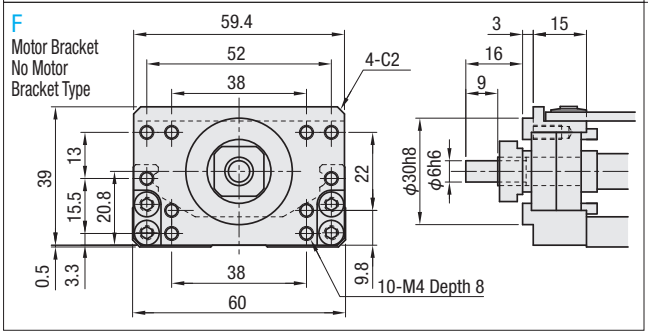

Servo Motor Application Table

Part Number	Flange Size	Manufacturer	Product Number	Wattage	Recommended Coupling
A3038	□38	Panasonic	MSMD5A	50W	SSCXW21 SSCPW21 SCPDW19
			MSME5A		
			MSMD01*	100W	
			MSME01*		
A3040	□40	YASKAWA Electric Corporation	SGMJV-A5A	50W	
			SGM7A-A5A		
			SGMAV-A5A		
			SGM7A-01A	100W	
			SGMJV-01A		
			SGMAV-01A		
		Mitsubishi Electric Corporation	HG-MR053	50W	
			HG-MR13	100W	
			HG-KR13		
		OMRON Corporation	R88M-K05030	50W	
			R88M-K10030	100W	
		Keyence Corporation	SV-M005	50W	
			SV-M010	100W	
E3040	□40	SIEMENS	1FK7011-5	50W	SCPDW25
			1FK7015-5	100W	

Shaft length in coupling will be 1.15mm shorter on each side when used with Siemens motor.

Stepping Motor Application Table

Part Number	Flange Size	Manufacturer	Product Number	Type	Recommended Coupling
T3042 (NEMA 17)	□42	Oriental Motor	PK24*	2-phase	SSCXW21 SSCPW21 SCPDW19
			RKS54*/PK54	5-phase	
			ARM46	α STEP	
T3056.4 (NEMA 23)	□56.4		PK26*	2-phase	
T3060	□60		RKS56*/PK56*	5-phase	
			ARM66	α STEP	

NEMA Standards are a set of standards stipulated by Electrical Manufacturers Association of United States.

Motor Adapter Centering Tools

RoHS

JIGLX30

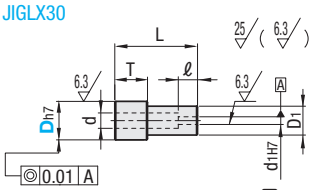

Two face milling on D part of JIGLX30-38.1. Check the CAD data for detailed drawing.

M 5056 Aluminum Alloy
S Clear Anodize

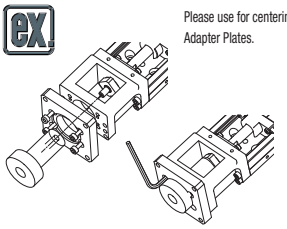

Please use for centering of Motor Adapter Plates.

Motor Mounting Example

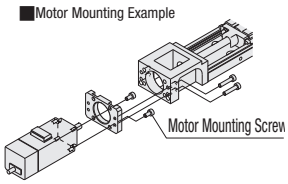

Secure included Motor Adapter to the motor.
Motor, coupling and motor mounting screws are not included.

Part Number	D	Applicable Adapter Plate	d	D1	d1	L	T	ℓ
JIGLX30	30	A3038/A3040	10	20	6	52.5	13	10
	38.1	T3056.4				51	12	
	36	T3060				53		

Ordering Example

Part Number	–	D
JIGLX30	–	30

Sensor Sets For Single Axis Actuators SX30 (Options)

SURUGA SEIKI CAD 2D

Proximity Sensor (SUNX) - Set Part Specification

SX Part Number	Code (□ is Sensor Qty.) * For L≤150, Max. 2 For L≥200, Max. 3	Sensor Rail		Sensor Rail		Sensor (* Qty per Sensor Included)		Sensor Flag	
		GX-F12A (ON when near)	GX-F812 (ON when away)	Rail (1 pc.)	Mounting Screw (Pitch +1 pc.)	Sensor Mounting Screw (1 pc.)	Mounting Nut (1 pc.)	Sensor Flag (1 pc.)	Sensor Flag Mounting Screw
SX30□□-B□	XA□	□pc (s).	–	SENC3□H	SCB3-5	CBSST3-8	LBNR3	Original	Flat Head Screw M2.6-4 (1 pc.)
	XB□	–	□pc (s).						
SX30□□-S□	XAS□	□pc (s).	–						
	XBS□	–	□pc (s).						
SX30□□C-B□	FA□	□pc (s).	–	SENAT3□H					SCB3-6 (2 pcs.)
	FB□	–	□pc (s).						
SX30□□C-S□	FAS□	□pc (s).	–						
	FBS□	–	□pc (s).						
SX30□□-B□	XW1	1 pc.	1 pc.	SENC3□H					Flat Head Screw M2.6-4 (1 pc.)
	XW2		2 pcs.						
	XW3	2 pcs.	1 pc.						
SX30□□-S□	XWS1	1 pc.	1 pc.						
	XWS2		2 pcs.						
	XWS3	2 pcs.	1 pc.						
SX30□□C-B□	FW1	1 pc.	1 pc.	SENAT3□H					SCB3-6 (2 pcs.)
	FW2		2 pcs.						
	FW3	2 pcs.	1 pc.						
SX30□□C-S□	FWS1	1 pc.	1 pc.						
	FWS2		2 pcs.						
	FWS3	2 pcs.	1 pc.						

Photo Sensor (SUNX) - Set Part Specification

SX Part Number	Code (□ is Sensor Qty.) * For L≤150, Max. 2 For L≥200, Max. 3	Photo Sensor	Sensor Rail		Sensor (* Qty per Sensor Included)				Sensor Flag	
			Rail (1pc.)	Mounting Screw (Pitch +1 pc.)	Sensor Bracket	Bracket Mounting Screw Nut	Sensor Mounting Screw	Sensor Mounting Washer	Sensor Flag (1 pc.)	Sensor Flag Mounting Screw
SX30□□-B□	SP□	PM-L25	SENC3□H	SCB3-5	Original	SCB3-5 (2 pcs.) LBNR3 (2 pcs.)	SCB2-6 (2 pcs.)	M2 Small Flat Washer (2 pcs.) M2 Spring Washer (2 pcs.)	Original	Flat Head Screw M2.6-4 (2 pcs.)
SX30□□-S□	SPS□									
SX30□□C-B□	MP□		SENAT3□H							SCB3-6 (2 pcs.)
SX30□□C-S□	MPS□									

Photo Sensor (Omron) - Set Part Specification

SX Part Number	Code (□ is Sensor Qty.) * For L≤150, Max. 2 For L≥200, Max. 3	Photo Sensor	Sensor Rail		Sensor (* Qty per Sensor Included)				Sensor Flag	
			Rail (1pc.)	Mounting Screw (Pitch +1 pc.)	Sensor Bracket	Bracket Mounting Screw Nut	Sensor Mounting Screw	Sensor Mounting Washer	Sensor Flag (1 pc.)	Sensor Flag Mounting Screw
SX30□□-B□	OP□	EE-SX951-R1M	SENC3□H	SCB3-5	Original	SCB3-5 (2 pcs.) LBNR3 (2 pcs.)	SCB3-6 (2 pcs.)	M3 Small Flat Washe (2 pcs.)	Original	Flat Head Screw M2.6-4 (2 pcs.)
SX30□□-S□	OPS□									
SX30□□C-B□	EP□		SENAT3□H							SCB3-6 (2 pcs.)
SX30□□C-S□	EPS□									

* Sensors are not sold separately

Option

Part Number	-	Block Qty.	-	Motor Adapter Plates	-	Base Length (L)	–	Code
SX3010	–	B1	–	A3040	–	600	–	XW1
SX3005	–	S1	–	A3040	–	600	–	SPS3

Proximity Sensor Type Installation Drawings - SUNX

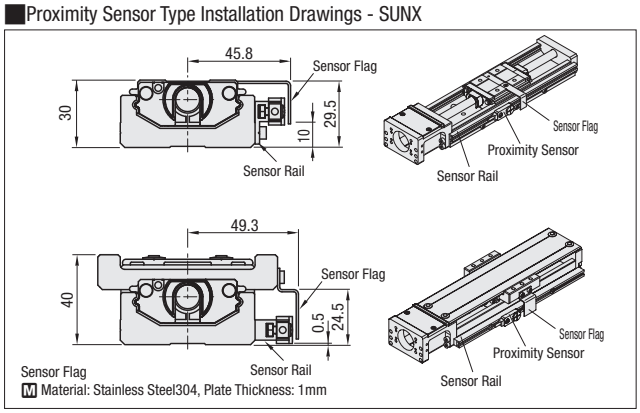

Photo Sensor Type Installation Drawings - SUNX / OMRON

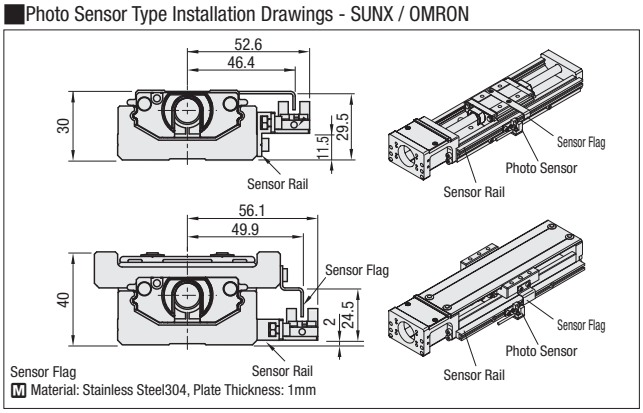

Cautions

- Sensor set is shipped with SX Actuator. Assembly required.
- Please check for all included parts immediately after unpacking. Some small parts can be lost. Please handle the products with great care.

SUNX and OMRON photo sensors are the same in outside dimensions.
Please access each sensor manufacture's website for the specifications of sensors in use.

New

Single Axis Actuator

Single Axis Actuators SX45 Standard / Cover Type

Convenient Sensor Sets are also available. P.A-036

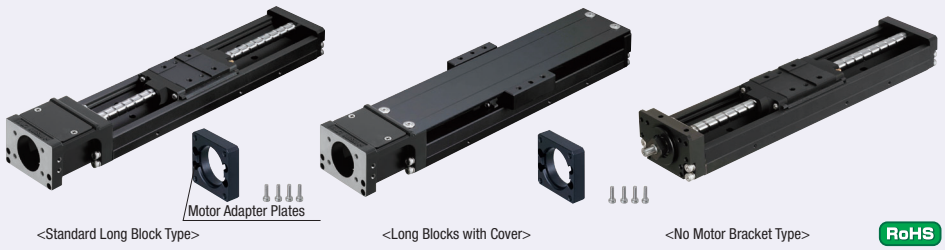

<Standard Long Block Type> <Long Blocks with Cover> <No Motor Bracket Type>

RoHS

Specifications	
SX45	
Standard / Cover	
Screw Shaft Dia. (mm)	15
Lead (mm)	10, 20
Accuracy	High Grade / Precision Grade

A Accessories

①Motor Adapter Plates
M 5052 Aluminum Alloy S Black Anodize
②Adapter Plate Screw 4 pcs. M Stainless SteelXM7
No accessory is included with No Motor Bracket Type.

For Material table, see P.A-015

Part Number	Standard Grease		Low Dust Generation Grease		Lubrication Unit MX-equipped (Standard Grease)	
	High Grade	Precision Grade	High Grade	Precision Grade	High Grade	Precision Grade
Lead 10	SX4510 (C)	SX4510 (C) P	SX4510 (C) G	SX4510 (C) PG	SX4510 (C) -MX	SX4510 (C) P-MX
Lead 20	SX4520 (C)	SX4520 (C) P	SX4520 (C) G	SX4520 (C) PG	SX4520 (C) -MX	SX4520 (C) P-MX

(C) is for Cover Type. Low Dust Generation Grease Information P.A-018 Lubrication Unit MX Information P.A-004

Standard Short Block Type

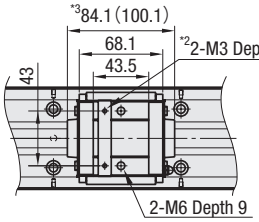

Standard Long Block Type

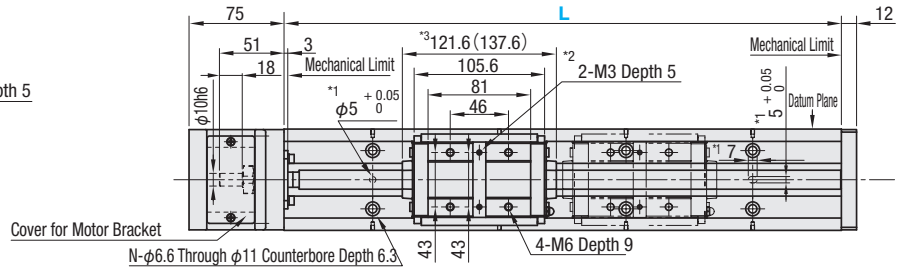

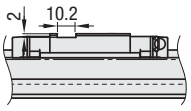

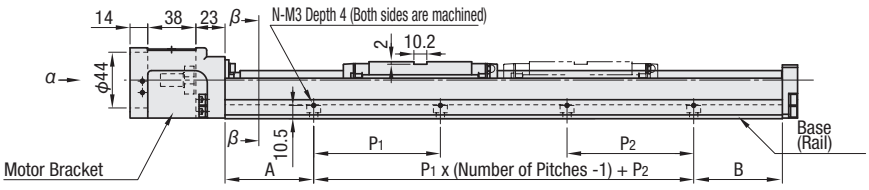

Short Blocks with Cover

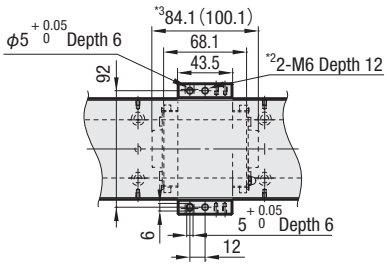

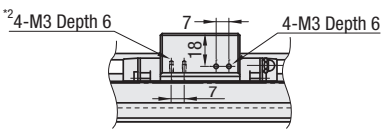

Long Blocks with Cover

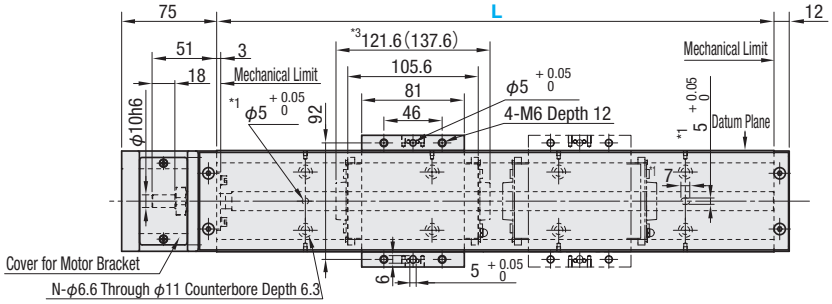

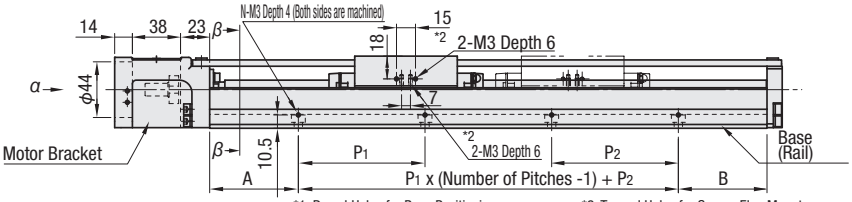

*1: Dowel Holes for Base Positioning. *2: Tapped Holes for Sensor Flag Mount.
*3: Value in ( ) is for Lubrication Unit MX-equipped Type.

Effective stroke is the value with 2.5mm margin on each side from mechanical limits, i.e., 5mm in total.
For Double Block Type, double-dashed lined blocks are not connected with the ball screw.
For Double Block Type, effective strokes are the values when two blocks contact with each other.
Precision specification value is the value achieved after fixing rails. (It is not a value before tightening the rail screws.) For values, see P.A-017

Standard

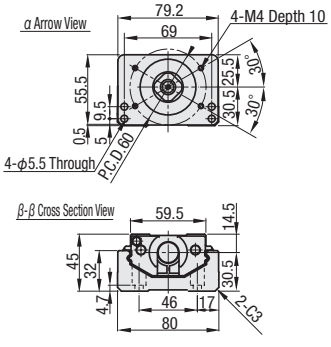

Cover

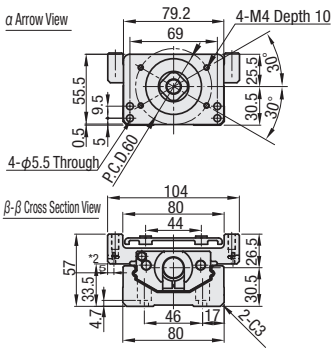

No Motor Bracket Type

* For mounting details, P.A-035

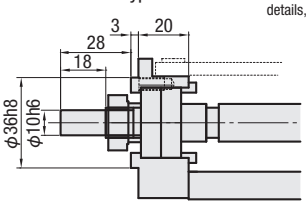

SURUGA SEIKI CAD 2D

New

Single Axis Actuator

Part Number: High Grade	Part Number: * Precision Grade	Block Qty.	Motor Adapter Plates	Base Length (L)	Mounting Hole Dimensions: A	P1	P2	B	Number of Pitches	Number of Holes (N)
(Standard Grease) SX4510 (C) SX4520 (C) (Low Dust Generation Grease) SX4510 (C) G SX4520 (C) G (Lubrication Unit MX-equipped, Standard Grease) SX4510 (C) -MX SX4520 (C) -MX	(Standard Grease) SX4510 (C) P SX4520 (C) P (Low Dust Generation Grease) SX4510 (C) PG SX4520 (C) PG (Lubrication Unit MX-equipped, Standard Grease) SX4510 (C) P-MX SX4520 (C) P-MX	Long Blocks (1 pc.)B1 (2 pcs.)B2 Short Blocks (1 pc.)S1 (2 pcs.)S2 *Lubrication Units MX-equipped types are available in B1/S1 only.	(Servo Motor) A4538 A4540 MA4560 A4560 E4540 E4555 (Stepping Motor) T4560 T4556.4 T4585 *(No Adapter Plate) N (No Motor Bracket) F	340	70	100	100	70	2	6
				390			50		3	8
				440			100			
				490			50		4	10
				540			100			
				590			50		5	12

* Precision Certificate is enclosed with precision grade products. * Motor adapter plate and mounting screws are not included with No Adapter Plate Type. * (C) is for Cover Type.

Accuracy Standards

Accuracy Standards	High Grade	Precision Grade
Positioning (mm)	0.1	0.025
Backlash (mm)	0.02	0.003
Positioning Repeatability (mm)	±0.005	±0.003
Running Parallelism (mm)	0.035	0.015
Starting Torque (N・cm)	10	

See P.A-017f or Maximum Velocity.
See P.A-016 for Moment of Inertia.

Effective Stroke, Total Mass

Base Overall Length (L)	* Effective Stroke: MX-unequipped B1	B2	S1	S2	MX-equipped B1	S1	* Total Mass (kg): Standard B1	B2	S1	S2	Cover B1	B2	S1	S2
340	210.4	88.8	247.9	163.8	194.4	231.9	5.77	6.69	5.37	5.91	6.59	8.09	5.94	6.78
390	260.4	138.8	297.9	213.8	244.4	281.9	6.37	7.29	5.98	6.51	7.23	8.73	6.57	7.41
440	310.4	188.8	347.9	263.8	294.4	331.9	6.97	7.9	6.58	7.11	7.86	9.36	7.2	8.04
490	360.4	238.8	397.9	313.8	344.4	381.9	7.57	8.5	7.18	7.71	8.49	9.99	7.84	8.68
540	410.4	288.8	447.9	363.8	394.4	431.9	8.18	9.1	7.78	8.31	9.13	10.63	8.47	9.31
590	460.4	338.8	497.9	413.8	444.4	481.9	8.78	9.7	8.39	8.92	9.76	11.26	9.1	9.94

* Effective stroke is indicated in dimensions with a margin of 2.5mm each from the ends.
* MX-equipped types are +0.024kg.

Servo Motor Application Table

Part Number	Flange Size	Manufacturer	Wattage
A4538	□38	Panasonic	50W/100W
A4540	□40	Mitsubishi Electric Corporation	
		OMRON Corporation	
		Keyence Corporation	
		YASKAWA Electric Corporation	50W/100W/150W
MA4560	□60	Panasonic	100W/200W/400W
A4560	□60	OMRON Corporation	100W
		YASKAWA Electric Corporation	200W/400W
		Mitsubishi Electric Corporation	
		Keyence Corporation	

For detailed diagram of Motor Adapter Plates, see P.A-035
For details on supported motor types, see P.A-041

Servo Motor Application Table

Part Number	Flange Size	Manufacturer	Wattage
E4540	□40	SIEMENS	50W/100W
E4555	□55		380W

Stepping Motor Application Table

Part Number	Flange Size	Manufacturer	Type
T4560	□60	Oriental Motor	5-phase / α STEP
T4556.4	□56.4	NEMA Standards	-
T4585	□85		

NEMA Standards are a set of standards stipulated by National Electrical Manufacturers Association of United States.
For details on supported motor types and detailed diagram of Motor Adapter Plates, see P.A-041

Ordering Example

Part Number	-	Block Qty.	-	Motor Adapter Plates	-	Base Length (L)
SX4510C	-	B1	-	A4540	-	540
SX4520-MX	-	B1	-	A4560	-	390

Lubrication Unit MX-equipped

Patented

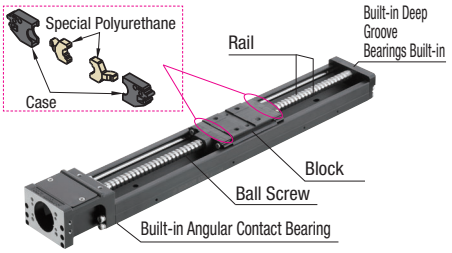

Provides long term maintenance-free operation.
For details, see P.A-004

Part Number	Block Qty.	Screw Shaft Dia.	Lead
SX45□□-B1/S1-□	1	15	10
SX45□□-B2/S2-□	2		
SX45□□-B1/S1-F	1		20
SX45□□-B2/S2-F	2		
SX45□□C-B1/S1-□	1	15	10
SX45□□C-B2/S2-□	2		
SX45□□C-B1/S1-F	1		20
SX45□□C-B2/S2-F	2		

SX45□□(C) Series sensor set can be specified as an alteration. For Detailed alteration diagram, see P.A-036

New

Motor Adapter Plates / Motor Adapter Centering Tools For Single Axis Actuators SX45

SURUGA SEIKI

CAD 2D

Motor Adapter Plate Dimensional Drawing

Note: Note that the Motor Adapter protrudes beyond the rail at * marked area.

A4538
Servo
□38

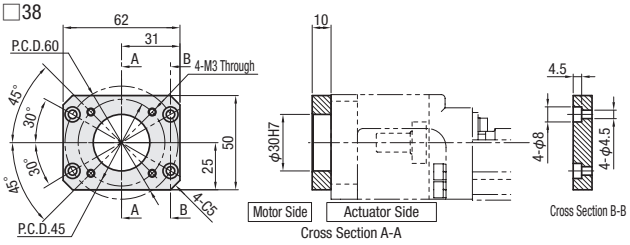

A4540
Servo
□40

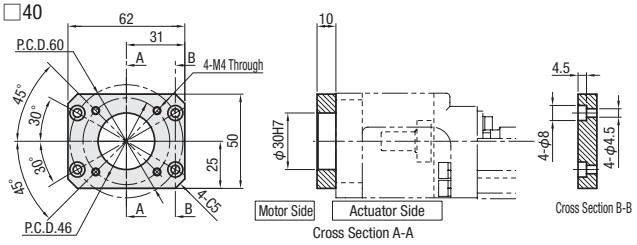

MA4560
Servo
□60

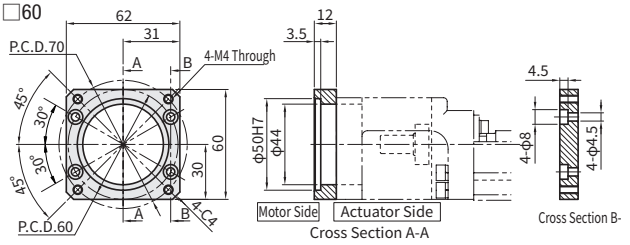

A4560
Servo
□60

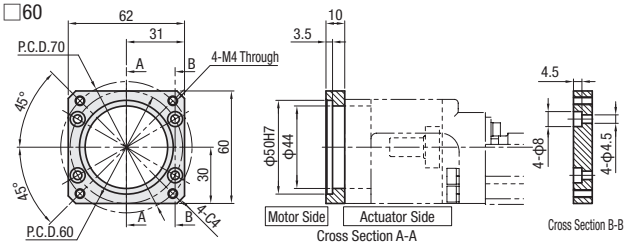

E4540
Servo
□40

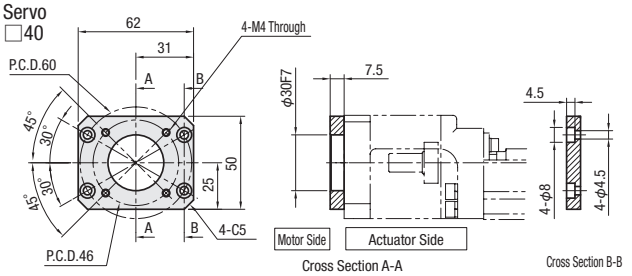

E4555
Servo
□55

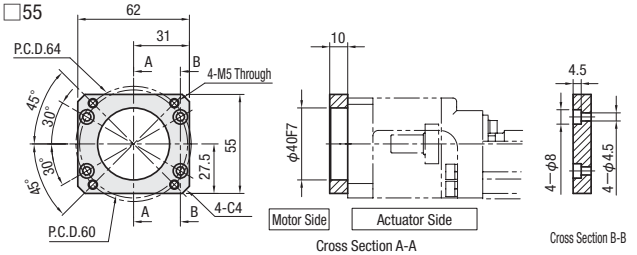

T4560
Stepping
□60

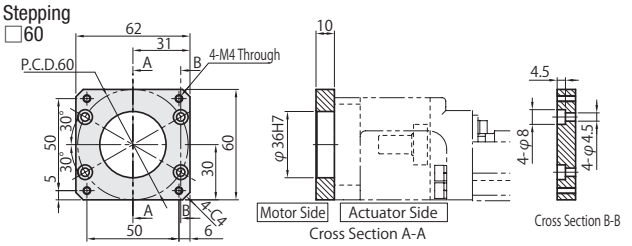

T4585
NEMA 34
Stepping
□85

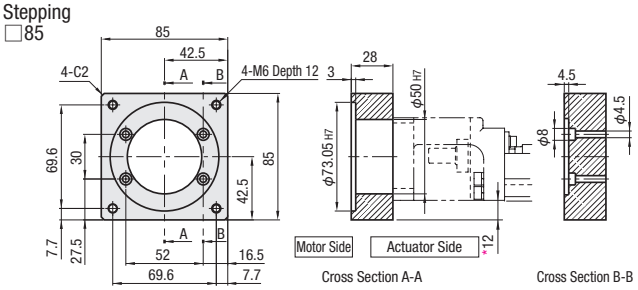

T4556.4
NEMA 23
Stepping
□56.4

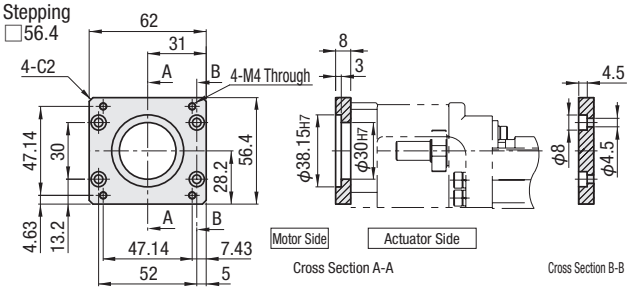

F
No Motor Bracket Type

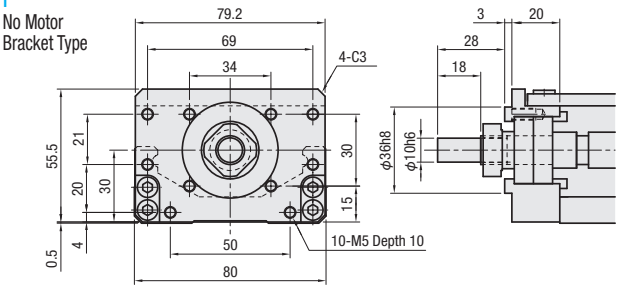

■Motor Adapter Centering Tool

JIGLX45

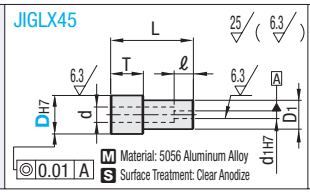

ex Please use for centering of Motor Adapter Plates.

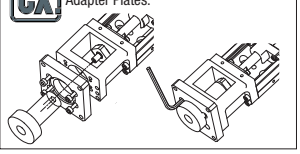

Part Number	D	Applicable Adapter Plate	d	D1	d1	L	T	ℓ
JIGLX45	30	A4538/A4540/T4556.4	15	25	10	62	22	20
	36	T4560				62	22	
	50	A4560/MA4560/T4585				61.5	13.5	

Ordering Example

Part Number	-	D
JIGLX45	-	30

Sensor Sets For Single Axis Actuators SX45 (Options)

SURUGA SEIKI CAD 2D

Proximity Sensor (SUNX) - Set Part Specification

SX Part Number	Code (□ is Sensor Qty.) * Up to 3Sensors	Sensor Type/Qty. GX-F12A (ON when near)	Sensor Type/Qty. GX-F12B (ON when away)	Sensor Rail: Rail (1 pc.)	Sensor Rail: Mounting Screw (Pitch +1 pc.)	Sensor (* Qty per Sensor Included): Sensor Mounting Screw (1 pc.)	Sensor (* Qty per Sensor Included): Mounting Nut (1 pc.)	Sensor Flag: Sensor Flag (1 pc.)	Sensor Flag: Sensor Flag Mounting Screw
SX45□□-B□ SX45□□-S□	XA□	□pc(s).	-	SENC3□H	SCB3-5	CBSST3-8	LBNR3	Dedicated	Flat Head Machine Screw M3-5 (1 pc.)
	XB□	-	□pc(s).						
SX45□□C-B□	FA□	□pc(s).	-						SCB3-6 (2 pcs.)
	FB□	-	□pc(s).						
SX45□□C-S□	FAS□	□pc(s).	-						
	FBS□	-	□pc(s).						
SX45□□-B□ SX45□□-S□	XW1	1 pc.	1 pc.						Flat Head Machine Screw M3-5 (1 pc.)
	XW2		2 pcs.						
	XW3	2 pcs.	1 pc.						
SX45□□C-B□	FW1	1 pc.	1 pc.						SCB3-6 (2 pcs.)
	FW2		2 pcs.						
	FW3	2 pcs.	1 pc.						
SX45□□C-S□	FWS1	1 pc.	1 pc.						
	FWS2		2 pcs.						
	FWS3	2 pcs.	1 pc.						

Photo Sensor (SUNX) - Set Part Specification

SX Part Number	Code (□is the number of Sensors) * Up to 3 Sensors	Photo Sensor	Sensor Rail: Rail (1 pc.)	Sensor Rail: Mounting Screw (Pitch +1 pc.)	Sensor(* Qty per Sensor Included): Sensor Bracket	Sensor(* Qty per Sensor Included): Bracket Mounting Screw Nut	Sensor(* Qty per Sensor Included): Sensor Mounting Screw	Sensor(* Qty per Sensor Included): Sensor Mounting Washer	Sensor Flag: Sensor Flag (1 pc.)	Sensor Flag: Sensor Flag Mounting Screw
SX45□□-B□ SX45□□-S□	SP□	PM-L25	SENC3□H	SCB3-5	Dedicated	SCB3-5 (2 pcs.) LBNR3 (2 pcs.)	SCB2-6 (2 pcs.)	M2 Small Flat Washer (2 pcs.) M2 Spring Washer (2 pcs.)	Dedicated	Flat Head Machine Screw M3-5 (2 pcs.)
SX45□□C-B□	MP□								Dedicated	SCB3-6 (2 pcs.)
SX45□□C-S□	MPS□									

Photo Sensor (OMRON) - Set Part Specification

SX Part Number	Code (□is the number of Sensors) * Up to 3 Sensors	Photo Sensor	Sensor Rail: Rail (1 pc.)	Sensor Rail: Mounting Screw (Pitch +1 pc.)	Sensor(* Qty per Sensor Included): Sensor Bracket	Sensor(* Qty per Sensor Included): Bracket Mounting Screw Nut	Sensor(* Qty per Sensor Included): Sensor Mounting Screw	Sensor(* Qty per Sensor Included): Sensor Mounting Washer	Sensor Flag: Sensor Flag (1 pc.)	Sensor Flag: Sensor Flag Mounting Screw
SX45□□-B□ SX45□□-S□	OP□	EE-SX951-R1M	SENC3□H	SCB3-5	Dedicated	SCB3-5 (2 pcs.) LBNR3 (2 pcs.)	SCB3-6 (2 pcs.)	M3 Small Flat Washer (2 pcs.)	Dedicated	Flat Head Machine Screw M3-5 (2 pcs.)
SX45□□C-B□	EP□								Dedicated	SCB3-6 (2 pcs.)
SX45□□C-S□	EPS□									

* Sensors are not sold separately.

Option

Part Number	Block Qty.	Motor Adapter Plates	Base Length (L)	Code
SX4510	B1	A4540	590	XW1
SX4520C	B1	A4560	340	EP2

Proximity Sensor Type Installation Drawings - SUNX

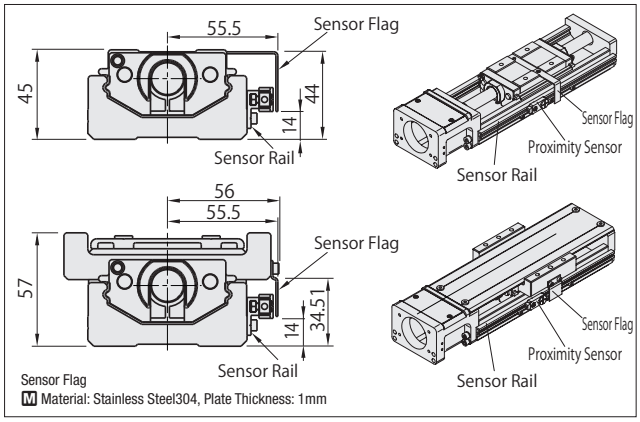

Photo Sensor Type Installation Drawings - SUNX / OMRON

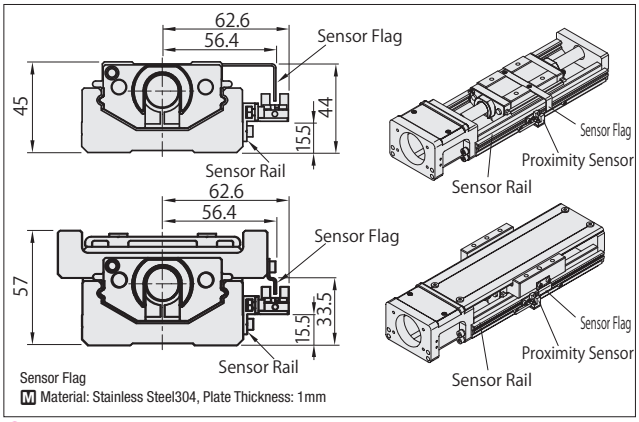

Cautions

- Sensor set is shipped with SX Actuator. Assembly required.
- Please check for all included parts immediately after unpacking. Some small parts can be lost. Please handle the products with great care.

SUNX and OMRON photo sensors are the same in external dimensions.
Please access each sensor manufacture's website for the specifications of sensors in use..