X-axis Long Stroke Slide Guide Stage □80: B15-150

B15-150

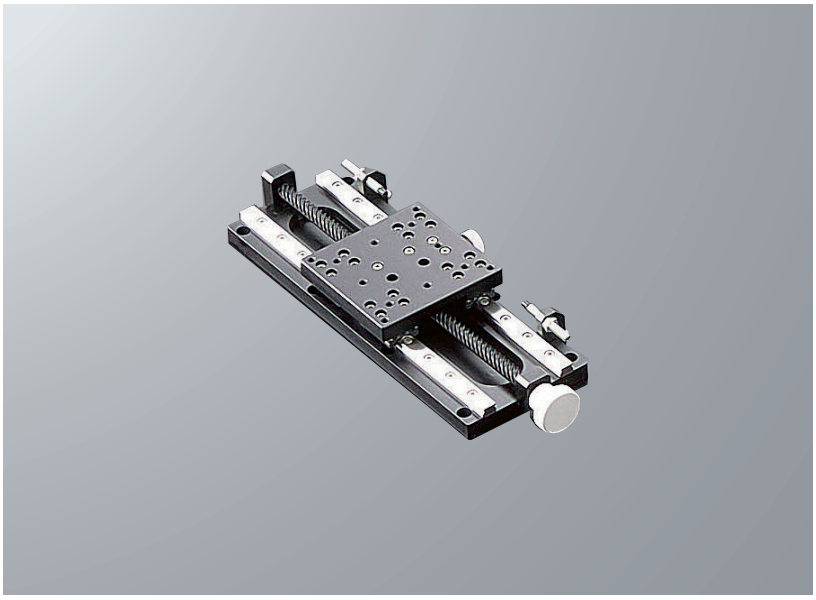

RoHS

■Long stroke stage.
■Optimal control system for heavy weight, big size and optical system.
■Adjustable travel distance by changing a stopper position on the side.

SPEC		
Model		B15-150
(Opposite hand)		B15-150R
Stage table size		80×80mm
Travel distance		128mm
Travel distance per rotation of knob		24mm
Guide		Slide guide
Load capacity		15kgf [147N]
Travel accuracy	Straightness	—
Allowable load for moment	Pitch	10.6N・m
	Yaw	7.5N・m
	Roll	11.5N・m
Parallelism		50μm
Motion parallelism		25μm
Weight		0.9kg
Main material–Surface finishing		Aluminum–Black alumite processing
Provided screws (Hex socket screws)		8 of M4—10

Dimensional outline drawings

B15-150

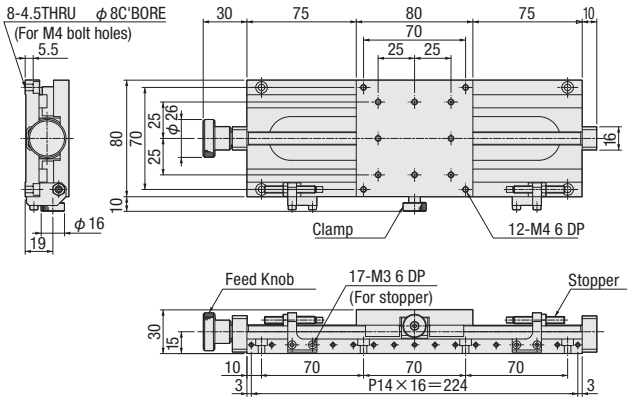

B15-150R

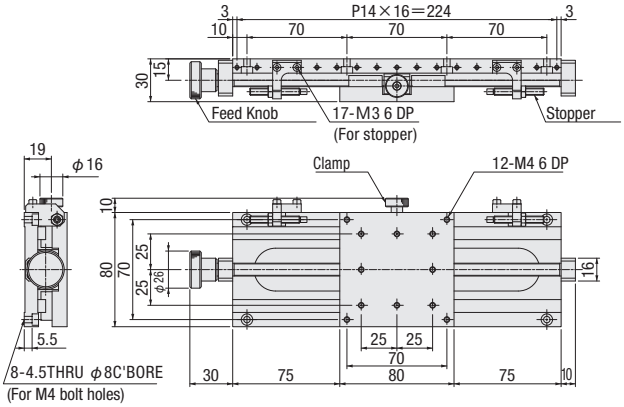

Z-axis Mount: B34 (140×200)

B34

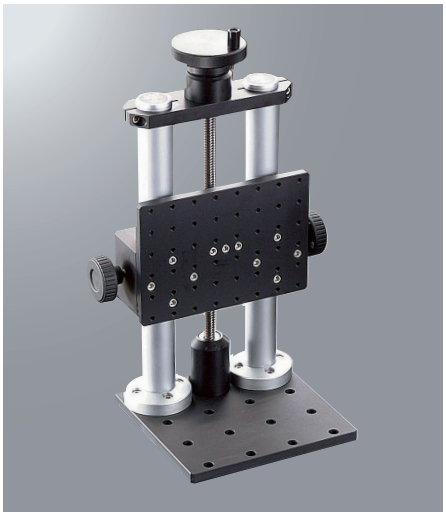

B34-N

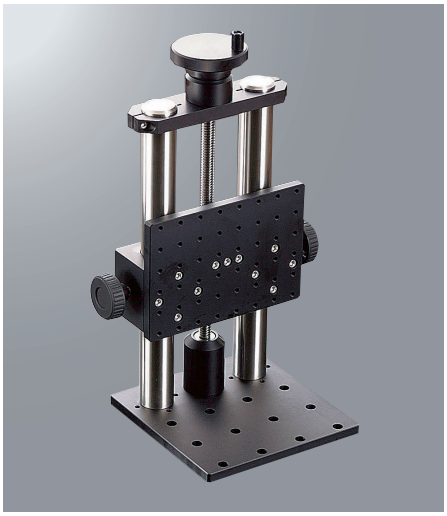

RoHS

SURUGA SEIKI

CAD 3D·2D

- Optimal control system for heavy weight.
- 3mm per handle rotation.
- B34 has anti-vibration mechanism with special rod.

Dimensional outline drawings

B34

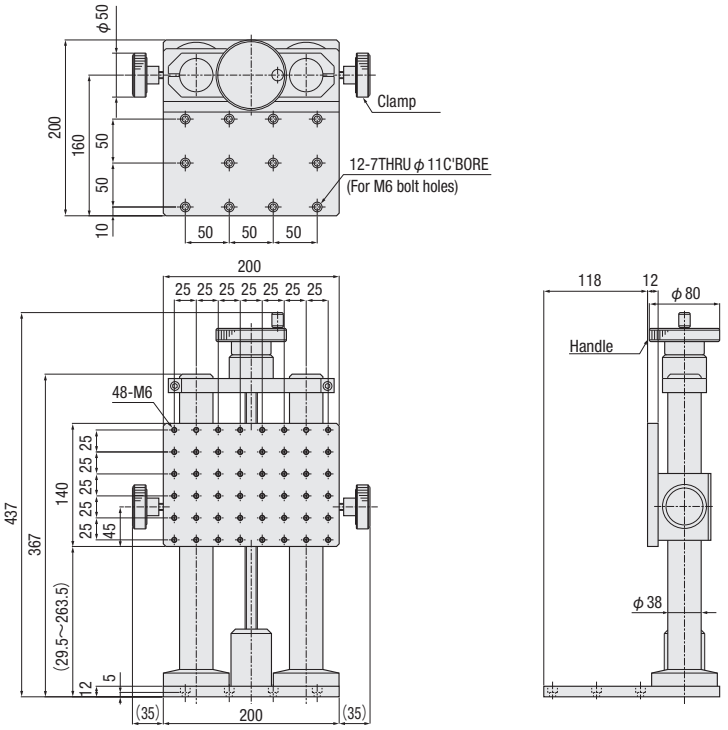

SPEC		
Model	B34	B34-N
Stage table size	140×200mm	
Travel distance	234mm	
Travel distance per rotation of knob	3mm	
Guide	Shaft	
Load capacity	15.0kgf [147N]	
Weight	10.3kg	11.3kg
Anti-vibration function	With anti-vibration function	Without anti-vibration function
Main material—Surface finishing	Aluminum–Black alumite processing	
Provided screws (Hex socket screws)	6 of M6—12	

Laboratory Jack: B35 (120×180/80×120)

B35

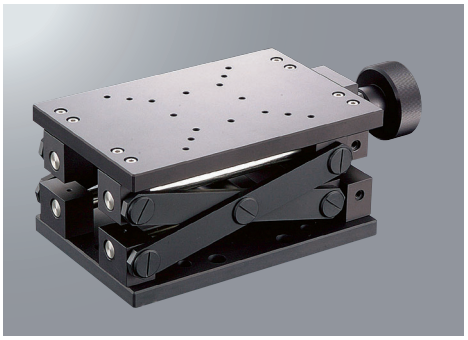

B35-N

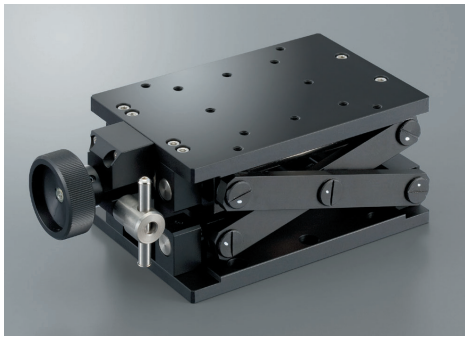

SURUGA SEIKI CAD 3D・2D

- Optimal control system for heavy weight.
- Approx.3mm～5mm per handle rotation
- Can be fixed strongly by a clamp.

Dimensional outline drawings

B35

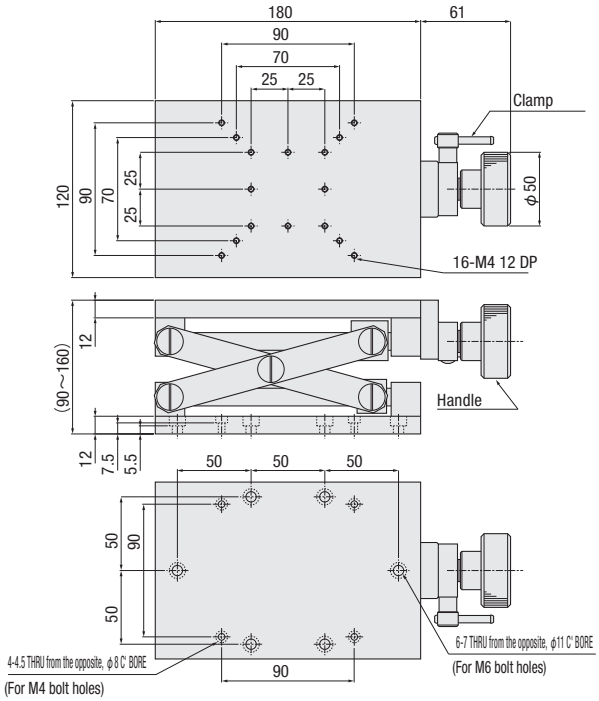

B35-N

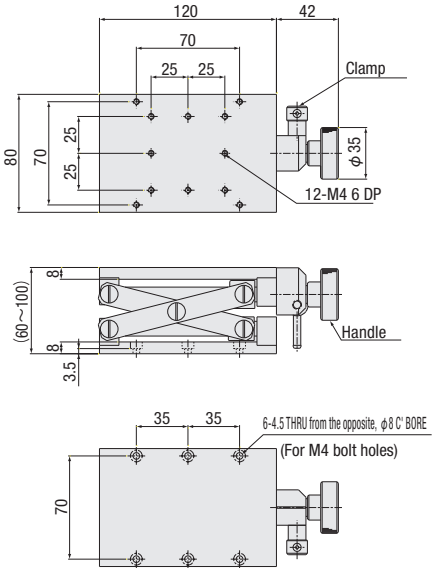

*On the structure of the product, it will vary the amount of movement by the position of the table.

Model	From the bottom to the top	From the top to the bottom
B35	Approx.7.3mm	Approx.3.4mm
B35-N	Approx.4.2mm	Approx.2.2mm

SPEC		
Model	B35	B35-N
Stage table size	120×180mm	80×120mm
Travel distance	70mm	40mm
Travel distance per rotation of knob	Approx.5mm	Approx.3mm
Load capacity	10.0kgf [98N]	7.0kgf [68.6N]
Parallelism	200μm	200μm
Weight	3.5kg	1.25kg
Main material—Surface finishing	Aluminum–Black alumite processing	
Provided screws (Hex socket screws)	4 of M4—12, 4 of M6—12	4 of M4—10

Multi-axis Stage Unit

RoHS

■There are variety of stage unit.
It is easy to select.

XYθ unit B210-60CN

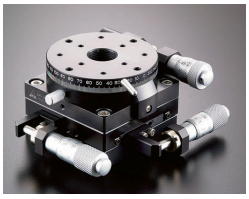

θXYunit B230-60N

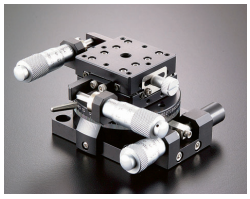

XYZθz unit B240-60CN

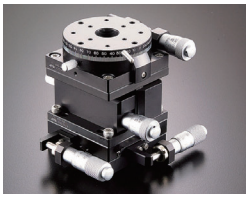

XYZθxθy unit B270-60C-L

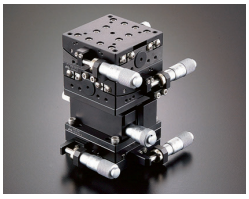

SPEC

NO.	Axis	Model	Load capacity (kgf [N])	Top Table surface Size (mm)	Mounted on lower surface Size (mm)	External dimension (mm)			Center of rotation High(mm)	Unit				
						W	D	H		XY	Z	θx	θy	θz
1	3	B210-40CN	0.9 [8.8]	ϕ38	32×32	98.5	80.9	42	—	B23-40C P.2-073～	—	—	—	B43-38N P.2-171～
2		B210-60CN	2.7 [26.4]	ϕ60	50×50	102.5	97.9	47	—	B23-60C P.2-073～	—	—	—	B43-60N P.2-171～
3		B210-80CN	3.5 [34.3]	ϕ85	70×70	151	131.7	47	—	B23-80C P.2-075～	—	—	—	B43-85N P.2-171～
4		B210-100CN	3.5 [34.3]	ϕ100	90×90	152.5	151.7	42	—	B23-100C P.2-075～	—	—	—	B47-100AN P.2-173
5		B220-100CN	6.0 [58.8]	ϕ100	90×90	161	151.7	50	—	B27-100C P.2-077～	—	—	—	B47-100AN P.2-173
6		B230-38N	0.9 [8.8]	25×25	32×32	68.2	73.9	50	—	B21-25CN P.2-069～	—	—	—	B43-38N P.2-171～
7		B230-60N	1.0 [9.8]	40×40	50×50	98.5	91.9	47	—	B23-40C P.2-073～	—	—	—	B43-60N P.2-171～
8	4	B240-40AN	0.7 [6.8]	ϕ38	32×32	112.2	116.8	82	—	B23-40A P.2-073～	B33-40A P.2-082	—	—	B43-38N P.2-171～
9		B240-60AN	1.7 [16.6]	ϕ60	50×50	133.5	135.5	87	—	B23-60A P.2-073～	B33-60A P.2-082	—	—	B43-60N P.2-171～
10		B240-80AN	2.3 [22.5]	ϕ85	70×70	206.5	195.7	102	—	B23-80A P.2-075～	B33-80A P.2-083	—	—	B43-85N P.2-171～
11		B240-40CN	0.7 [6.8]	ϕ38	32×32	98.5	95.8	82	—	B23-40C P.2-073～	B33-40A P.2-082	—	—	B43-38N P.2-171～
12		B240-60CN	1.7 [16.6]	ϕ60	50×50	102.5	103.3	87	—	B23-60C P.2-073～	B33-60A P.2-082	—	—	B43-60N P.2-171～
13		B240-80CN	2.3 [22.5]	ϕ85	70×70	151	137.7	102	—	B23-80C P.2-075～	B33-80A P.2-083	—	—	B43-85N P.2-171～
14	5	B250-40C-L	0.3 [2.9]	40×40	32×32	98.5	96	97	25	B23-40C P.2-073～	B33-40A P.2-082	B54-40U2N P.2-141～	B54-40UN P.2-141～	—
15		B250-40C-W	0.2 [1.9]	40×40	32×32	98.5	96	102	40	B23-40C P.2-073～	B33-40A P.2-082	B54-40UN P.2-141～	B54-40LN P.2-141～	—
16		B250-60C-L	0.76 [7.4]	60×60	50×50	102.5	103	107	35	B23-60C P.2-073～	B33-60A P.2-082	B54-60U2N P.2-145～	B54-60UN P.2-145～	—
17		B250-60C-W	0.9 [8.8]	60×60	50×50	102.5	103	102	60	B23-60C P.2-073～	B33-60A P.2-082	B54-60UN P.2-145～	B54-60LN P.2-145～	—
18		B270-40C-L	0.5 [4.9]	40×40	32×32	100.5	96.5	102	40	B23-40C P.2-073～	B33-40A P.2-082	B58-40UC P.2-159～	B58-40LC P.2-159～	—
19		B270-40C-W	0.5 [4.9]	40×40	32×32	100.5	96.5	102	60	B23-40C P.2-073～	B33-40A P.2-082	B58-40LC P.2-159～	B58-40WLC P.2-159～	—
20		B270-60C-L	1.4 [13.7]	60×60	50×50	113.5	109	112	50	B23-60C P.2-073～	B33-60A P.2-082	B58-60UC P.2-163～	B58-60LC P.2-163～	—
21		B270-60C-W	1.4 [13.7]	60×60	50×50	113.5	109	112	75	B23-60C P.2-073～	B33-60A P.2-082	B58-60LC P.2-163～	B58-60WLC P.2-163～	—
22		B270-60C-T	1.4 [13.7]	60×60	50×50	113.5	109	112	100	B23-60C P.2-073～	B33-60A P.2-082	B58-60WLC P.2-163～	B58-60TLC P.2-163～	—

※Size might be changed due to micrometer travel range.

Plese feel free to contact us

TEL: +81-3-6711-5014 FAX: +81-3-6711-5021

E-Mail: e-ost@suruga-g.co.jp

Dimensional outline drawings

B210 series (B210-40/60CN)

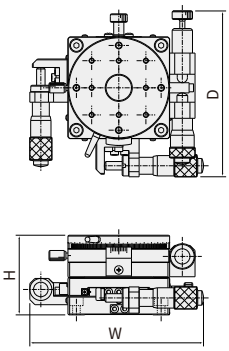

B210,220 series (B210-80/100CN/B220-100CN)

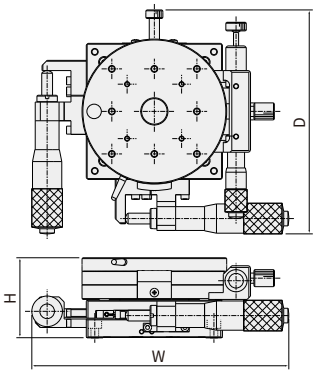

B230 series (B230-38/60CN)

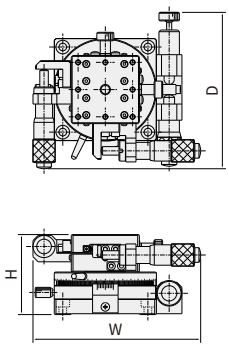

B240 series (B240-40/60AN)

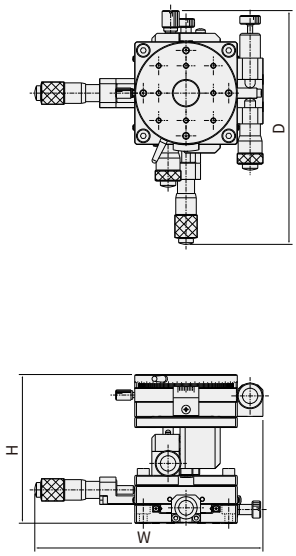

B240 series (B240-80AN)

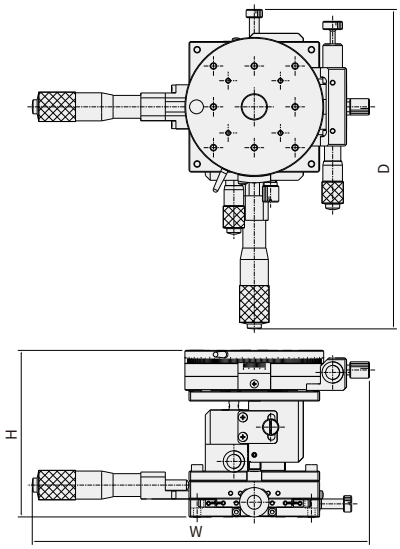

B240 series (B240-40/60CN)

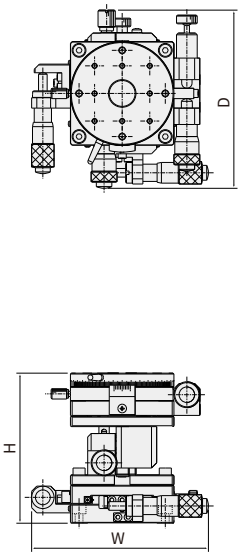

B240 series (B240-80CN)

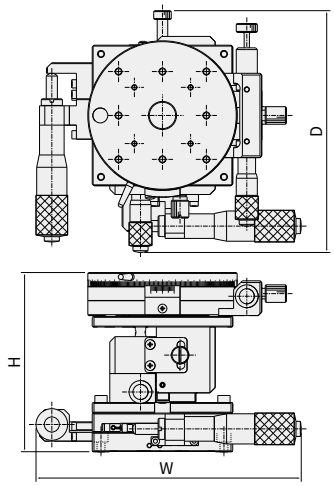

B250 series (B250-60C-□)

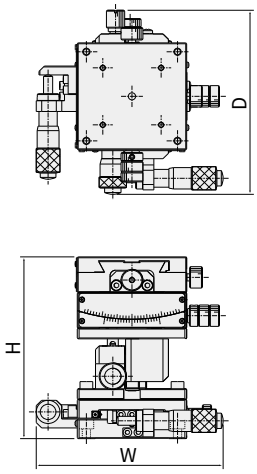

B270 series (B270-60C-□)

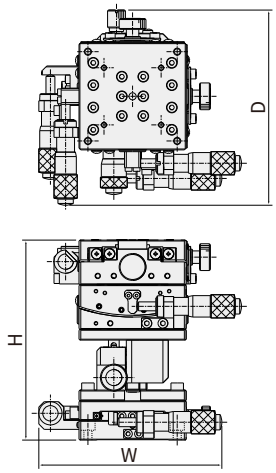

Micrometer Head (Maintenance parts)

RoHS

Micrometer head B80-1

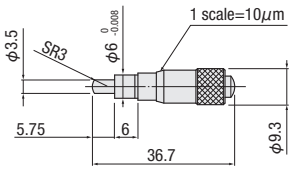

Stroke (mm)	±3.25
Minimum scale (mm)	0.01
Screw pitch (mm/1 rotation)	0.5
Weight (kg)	0.01

Micrometer head B80-2

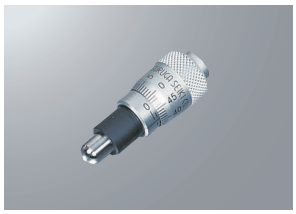

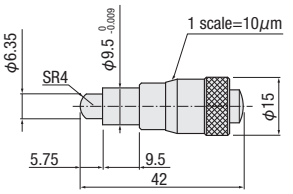

Stroke (mm)	±3.25
Minimum scale (mm)	0.01
Screw pitch (mm/1 rotation)	0.5
Weight (kg)	0.03

Micrometer head B80-3

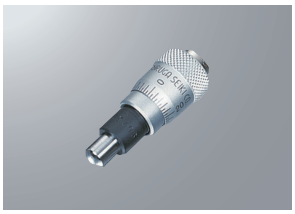

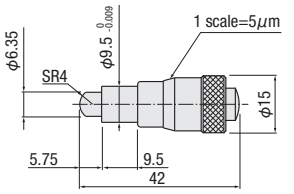

Stroke (mm)	±3.25
Minimum scale (mm)	0.005
Screw pitch (mm/1 rotation)	0.25
Weight (kg)	0.03

Micrometer head B80-4

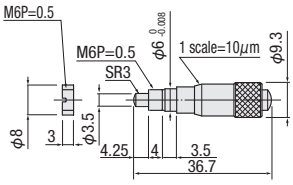

Stroke (mm)	±3.25
Minimum scale (mm)	0.01
Screw pitch (mm/1 rotation)	0.5
Weight (kg)	0.01

Micrometer head B81-2

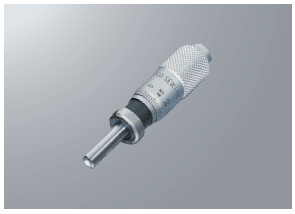

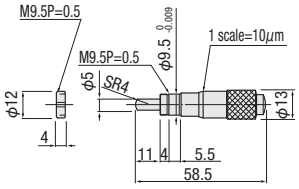

Stroke (mm)	±6.5
Minimum scale (mm)	0.01
Screw pitch (mm/1 rotation)	0.5
Weight (kg)	0.03

Micrometer head B82-1

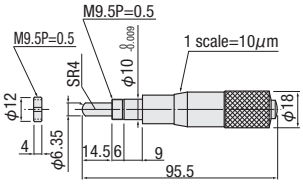

Stroke (mm)	±12.5
Minimum scale (mm)	0.01
Screw pitch (mm/1 rotation)	0.5
Weight (kg)	0.09

Coarse-fine micrometer B83-1

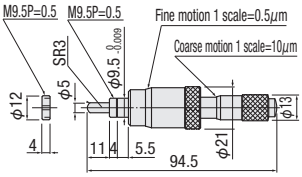

Stroke	Rough (mm)	±6.5
	micromotion (mm)	0.2
Minimum scale	Rough (mm)	0.01
	micromotion (mm)	0.0005
Screw pitch (mm/1 rotation)		0.5
Weight (kg)		0.1

Degimatic micrometer B84-1

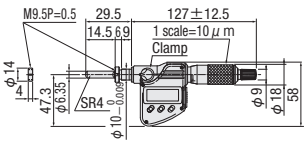

Stroke (mm)	0～25
Minimum (mm)	0.001
Micrometer scale(mm)	0.01
Difference (μm)	±2
Screw pitch (mm/1 rotation)	0.5
Weight (kg)	0.235

Micrometer knob B90-1

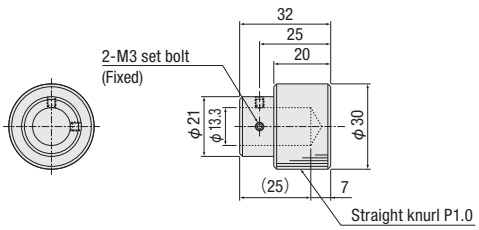

Attachable on φ13mm micrometer. Made by resin.
Improvement operation depending on mounting 30mm micrometer. It can be supported long time operation.

Feeding Screw

CAD RoHS

Feeding screw B85-1

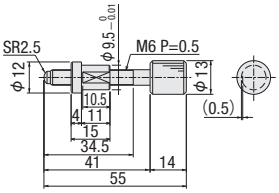

Stroke (mm)	±6.5
Screw pitch (mm/1 rotation)	0.5
Weight (kg)	0.03

Feeding screw B85-2

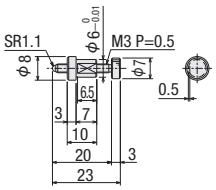

Stroke (mm)	±3.2
Screw pitch (mm/1 rotation)	0.5
Weight (kg)	0.005

Feeding screw B85-3

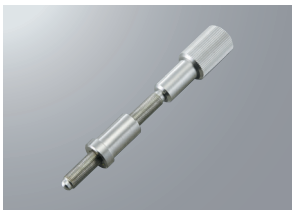

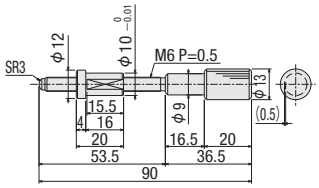

Stroke (mm)	±12.5
Screw pitch (mm/1 rotation)	0.5
Weight (kg)	0.05

Feeding screw (Fine pitch) B86-1

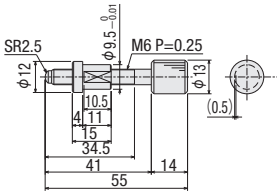

Stroke (mm)	±6.5
Screw pitch (mm/1 rotation)	0.25
Weight (kg)	0.03

Feeding screw (Fine pitch) B86-2

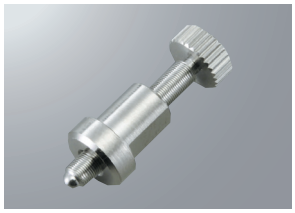

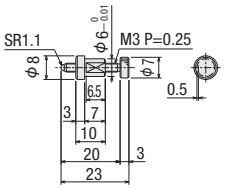

Stroke (mm)	±3.2
Screw pitch (mm/1 rotation)	0.25
Weight (kg)	0.005

Feeding screw (Long pitch) B87-1

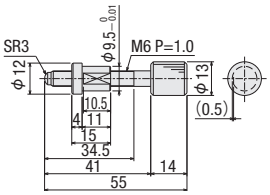

Stroke (mm)	±6.5
Screw pitch (mm/1 rotation)	1.0
Weight (kg)	0.03

Feeding screw (Long pitch) B87-3

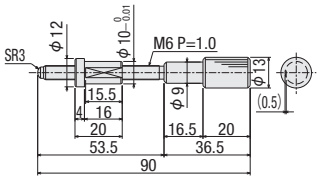

Stroke (mm)	±12.5
Screw pitch (mm/1 rotation)	1.0
Weight (kg)	0.05

Feeding screw (Handled by hex wrench) B88-1

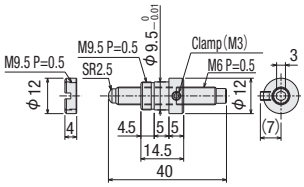

Stroke (mm)	±6.5
Screw pitch (mm/1 rotation)	0.5
Weight (kg)	0.015

Feeding screw (Handled by hex wrench) B88-2

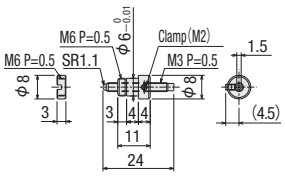

Stroke (mm)	±3.2
Screw pitch (mm/1 rotation)	0.5
Weight (kg)	0.005

Feeding screw (Fine pitch: Handled by hex wrench) B89-1

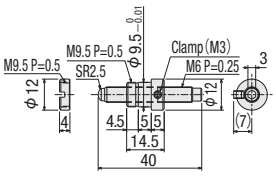

Stroke (mm)	±6.5
Screw pitch (mm/1 rotation)	0.25
Weight (kg)	0.015

Feeding screw (Fine pitch: Handled by hex wrench) B89-2

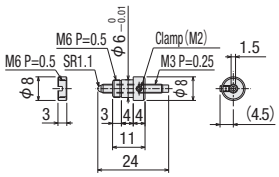

Stroke (mm)	±3.2
Screw pitch (mm/1 rotation)	0.25
Weight (kg)	0.005

Z-axis Bracket

CAD RoHS

■Z-axis Bracket A47-1N

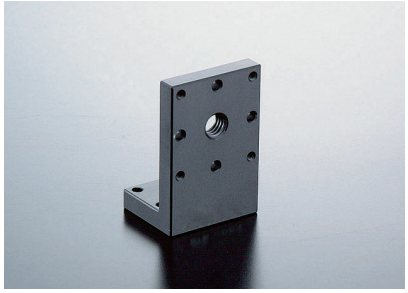

Z-axis bracket for □25mm stage.

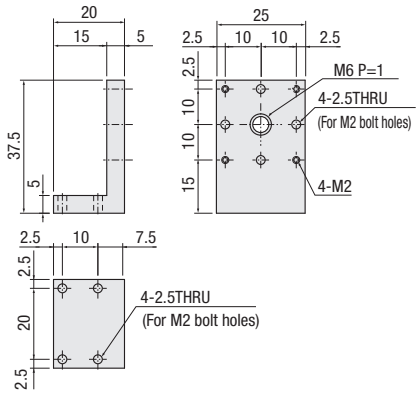

■Z-axis Bracket A47-2

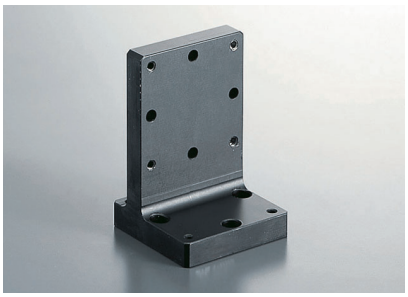

Z-axis bracket for □40mm linear stage. Attachable each blacket surface.

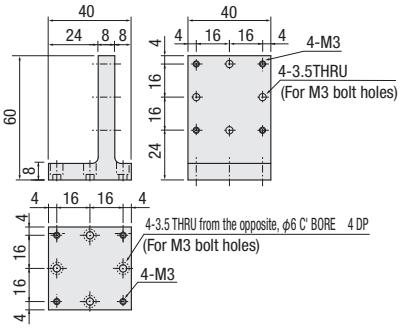

■Z-axis Bracket A47-4

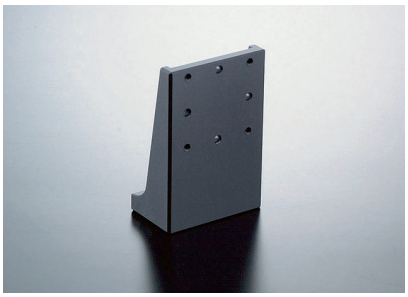

Z-axis bracket for □40mm linear stage.

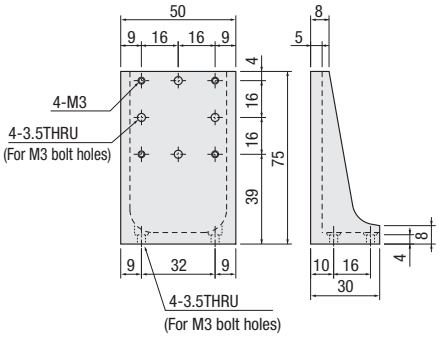

■Z-axis Bracket A47-106

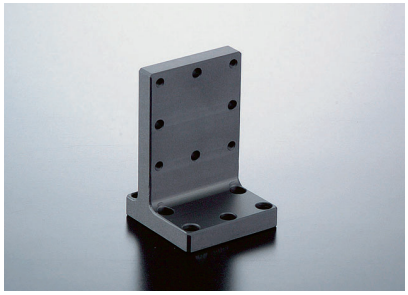

Z-axis bracket for □40mm stage.

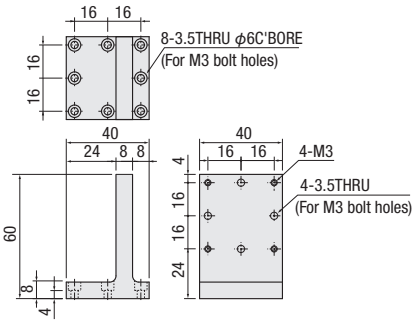

■Stainless Z-axis Bracket AS47-2

Z-axis bracket for □40mm linear stage. Attachable each blacket surface.

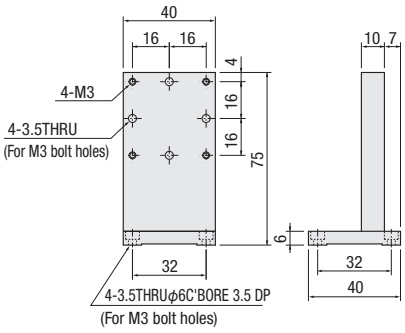

■Z-axis Bracket A47-3

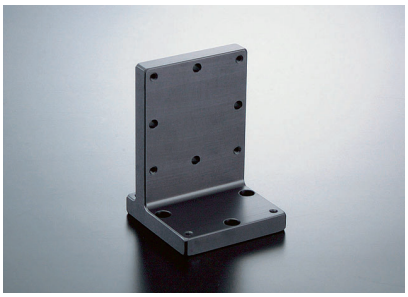

Z-axis bracket for □60mm linear stage. Attachable each blacket surface.

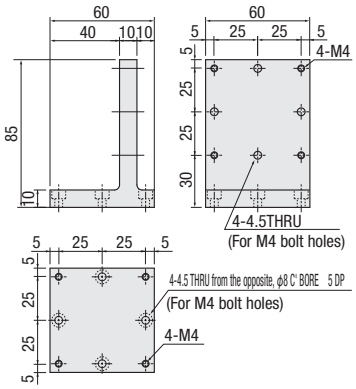

SPEC						
Model	A47-1N	A47-2	A47-4	A47-106	AS47-2	A47-3
Main material–Surface finishing	Aluminum–Black alumite processing	Aluminum–Black alumite processing	Aluminum–Black alumite processing	Aluminum–Black alumite processing	Stainless	Aluminum–Black alumite processing
Weight	0.02kg	0.07kg	0.08kg	0.07kg	0.3kg	0.2kg
Provided screws (Hex socket screws)	4 of M2—8	4 of M3—8	4 of M3—8	4 of M3—8	4 of M3—6	4 of M4—10

■Z-axis Bracket A47-5

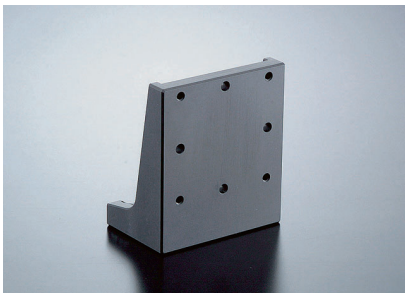

Z-axis bracket for □60mm linear stage.

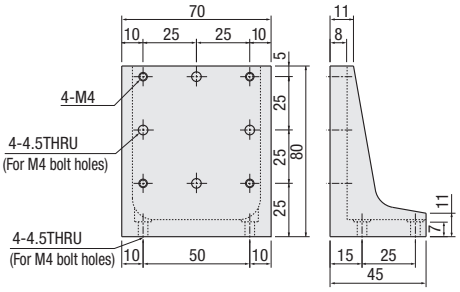

■Z-axis Bracket A47-6/ASS80Z-1

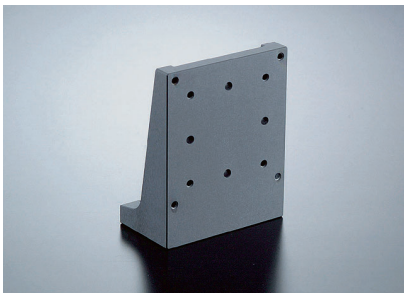

For □80mm stage.
A47-6: BSB16/For B11-80
ASS80Z-1: For BSS16-80

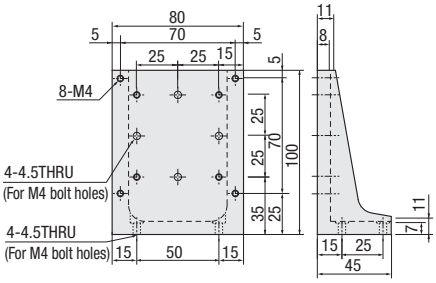

■Z-axis Bracket A47-7

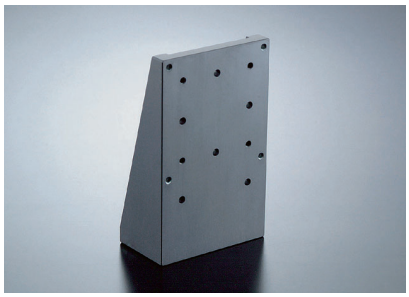

It becomes Z-axis stage using □80mm side pushing, coarse motion micrometer and long stroke type (B12-60A,B) ,

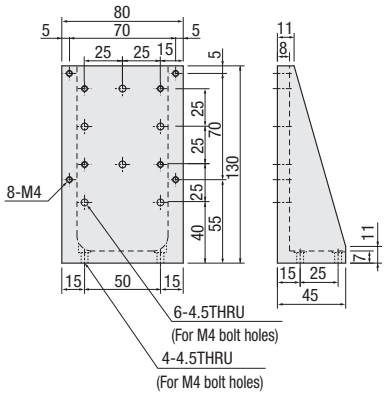

■Stainless Z-axis Bracket AS47-3

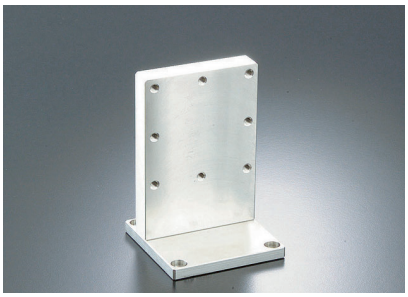

Z-axis bracket for □60mm linear stage. Attachable each bracket surface.

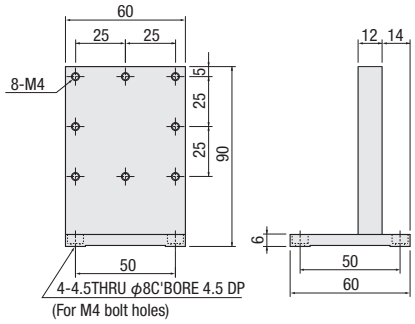

■Z-axis Bracket ASS25Z-1/ASB25Z-1

For SS stage □25mm
ASS25Z-1: For BSS16-25
ASB25Z-1: For BSB16-25

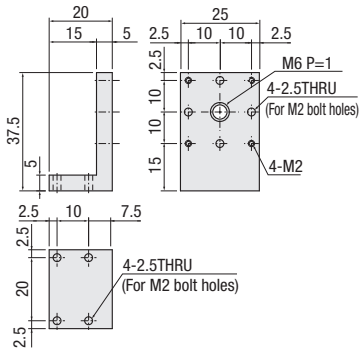

■Z-axis Bracket ASS40Z-1/ASB40Z-1

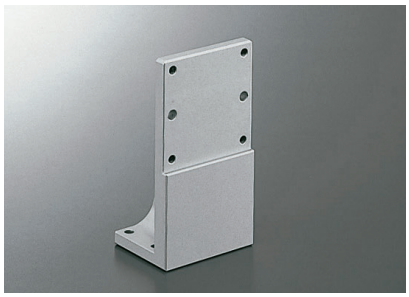

For □40mm linear stage
ASS40Z-1: For BSS16-40
For PG413
ASB40Z-1: For BSB16-40

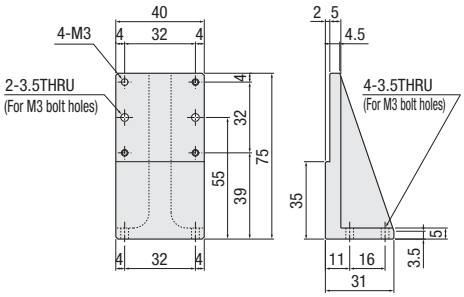

SPEC									
Model	A47-5	A47-6	ASS80Z-1	A47-7	AS47-3	ASS25Z-1	ASB25Z-1	ASS40Z-1	ASB40Z-1
Main material–Surface finishing	Aluminum–Black alumite processing	Aluminum–Black alumite processing	Aluminum–White alumite processing	Aluminum–Black alumite processing	Stainless	Aluminum–White alumite processing	Aluminum–Black alumite processing	Aluminum–White alumite processing	Aluminum–Black alumite processing
Weight	0.19kg	0.29kg	0.29kg	0.41kg	0.5kg	0.02kg	0.02kg	0.1kg	0.1kg
Provided screws (Hex socket screws)	4 of M4—12	4 of M4—12	4 of M4—12	4 of M4—12	4 of M4—6	4 of M2—8	4 of M2—8	4 of M3—10	4 of M3—10

Z-axis Bracket

CAD RoHS

■Z-axis Bracket ASS50Z-1

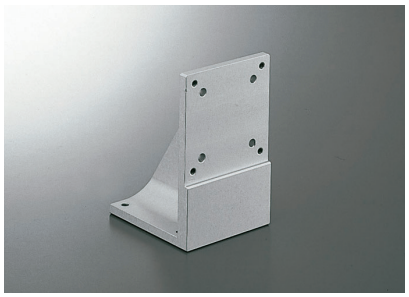

For □50mm linear stage
ASS50Z-1: For BSS16-50
For PG513 series

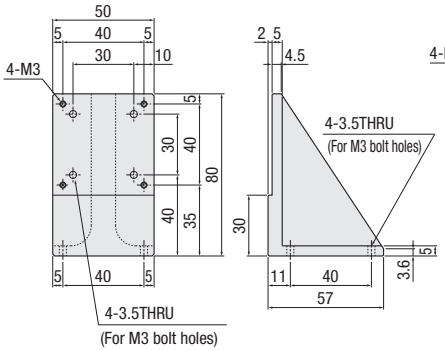

■Z-axis Bracket ASS60Z-1/ASB60Z-1

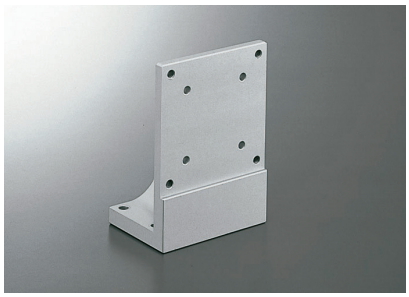

For □60mm linear stage
ASS60Z-1: For BSS16-60
For PG615 series
ASB60Z-1: For BSB16-60

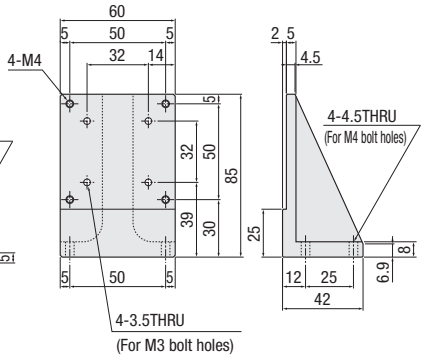

■Z-axis Bracket ASS70Z-1

For □70mm linear stage
ASS70Z-1: For BSS16-70
For PG715 series

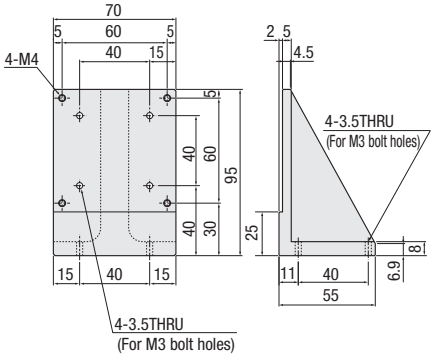

■Z-axis Bracket A47-101

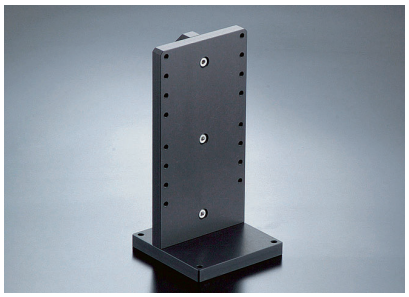

Z-axis bracket for motorized stage. Compatible stage KS102-30, KS102-70.

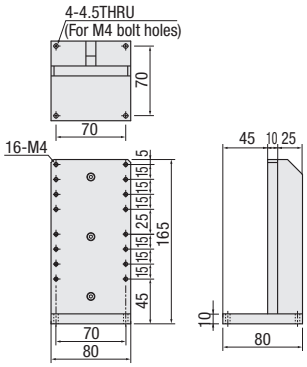

■Z-axis Bracket A47-112

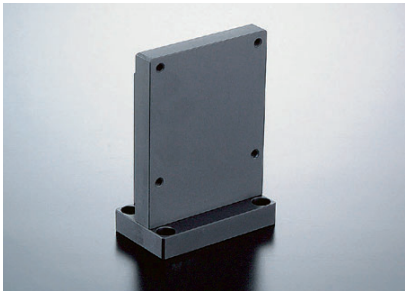

Z-axis bracket for motorized stage KXC06020/KS101-30 series.

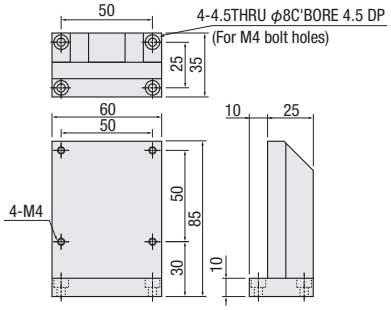

■Z-axis Bracket A47-105

Z-axis bracket for motorized stage. Compatible stage KS102-100

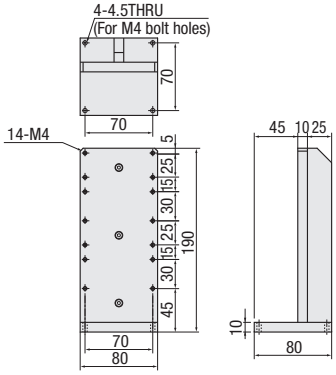

SPEC							
Model	ASS50Z-1	ASS60Z-1	ASB60Z-1	ASS70Z-1	A47-101	A47-112	A47-105
Material–Surface finishing	Aluminum–White alumite processing	Aluminum–White alumite processing	Aluminum–Black alumite processing	Aluminum–White alumite processing	Aluminum–Black alumite processing	Aluminum–Black alumite processing	Aluminum–Black alumite processing
Weight	0.2kg	0.2kg	0.2kg	0.3kg	0.6kg	0.22kg	0.67kg
Provided screws (Hex socket screws)	4 of M3—10	4 of M4—12	4 of M4—12	4 of M3—12	4 of M4—16	4 of M4—12	4 of M4—16

■Z-axis Bracket AZTB180A-390

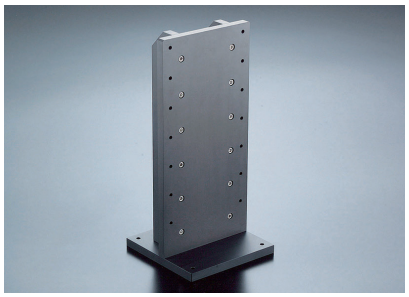

Z-axis bracket for motorized stage. Compatible stage KXS18100, KXS18200 and KXS18300

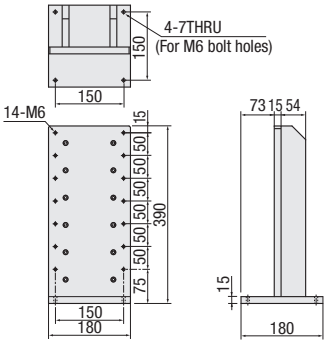

■Z-axis Bracket A47-1040

Z-axis bracket for motorized stage. Compatible stage KX1040

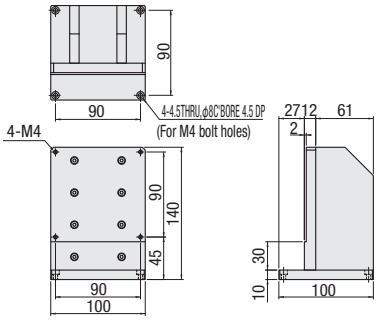

■Z-axis Bracket A47-1250

Z-axis bracket for motorized stage. Compatible stage KX1250

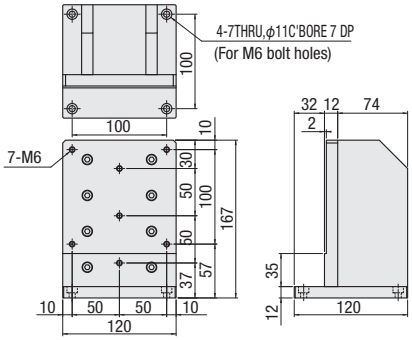

■Z-axis Bracket AZTW60A-95

Z-axis bracket for motorized stage. Compatible stage KXG06020 and KXG06030

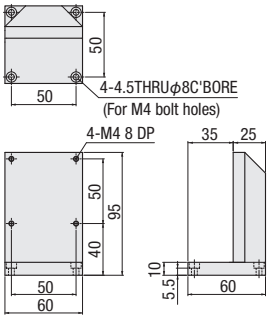

■Z-axis Bracket AZTB60A-95

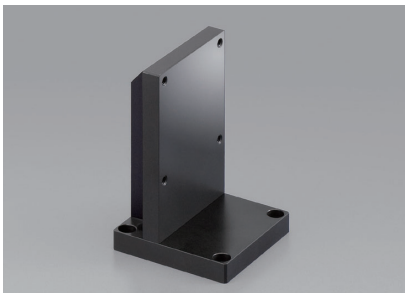

Z-axis bracket for motorized stage. Compatible stage KXC06020

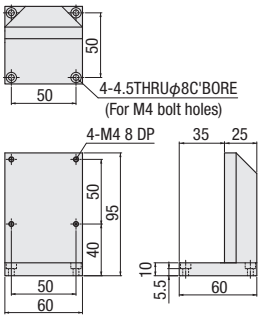

■Z-axis Bracket AZTW60A-140

Z-axis bracket for motorized stage. Compatible stage KXL06030, KXL06050 and KXL06075

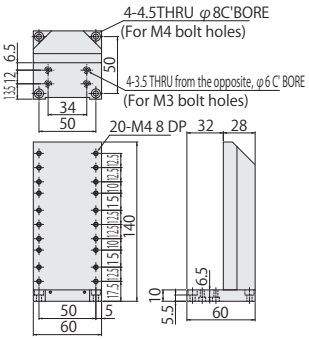

SPEC						
Model	AZTB180A-390	A47-1040	A47-1250	AZTW60A-95	AZTB60A-95	AZTW60A-140
Material–Surface finishing	Aluminum–Black alumite processing	Aluminum–Black alumite processing	Aluminum–Black alumite processing	Aluminum–White alumite processing	Aluminum–Black alumite processing	Aluminum–White alumite processing
Weight	5.58kg	1.04kg	1.80kg	0.36kg	0.36kg	0.72kg
Provided screws (Hex socket screws)	4 of M6—25	4 of M4—10	4 of M6—12	4 of M4—10	4 of M4—10	4 of M4—10

Adaptor Plate

CAD RoHS

■Adaptor plate A49-50B-1/A49-50

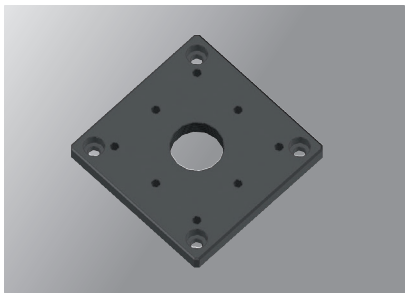

This black adaptor plate is attached 40 x 40mm stage on a 50 x 50mm stage.
※White almite treatment for A49-50

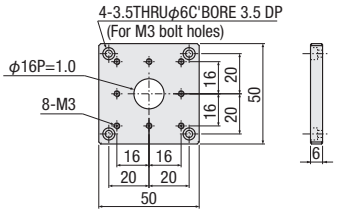

■Adaptor plate A49-50B-2

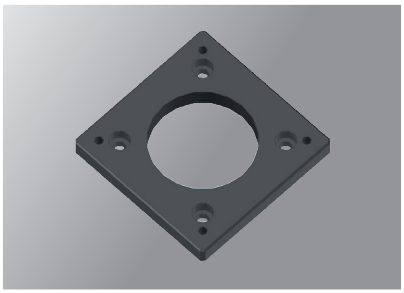

This black adaptor plate is attached 50 x 50mm stage on a 40×40・60×60・ϕ60・ϕ75mm stage.

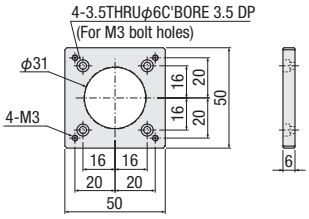

■Adaptor plate A49-70

This is a white adaptor plate for attachment 70 x 70mm and 60 x 60mm stage.

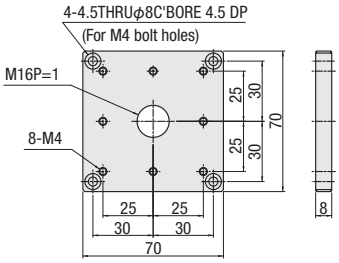

■Adaptor plate A49-70B-1

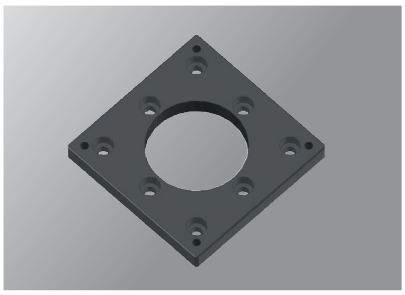

This black adaptor plate is attached 70 x 70mm stage on a 60×60・80×80・100×100mm・ϕ75・ϕ100mm stage.

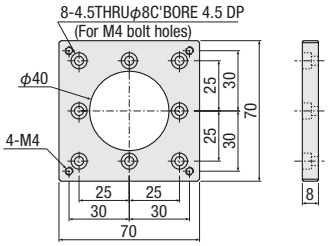

■Adaptor plate A49-80

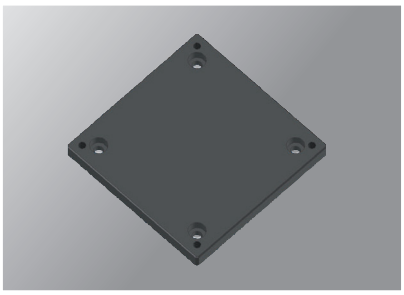

This black adaptor plate is attached 70×70mm on a 80×80mm stage and ϕ75mm rotation stage.

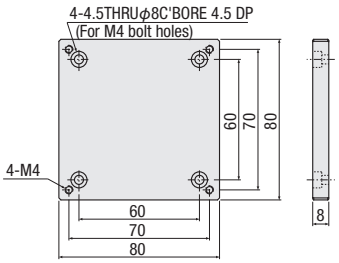

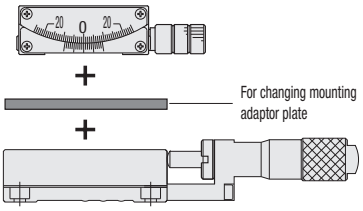

SPEC						
Model	A49-50B-1	A49-50B-2	A49-50	A49-70	A49-70B-1	A49-80
Main material–Surface finishing	Aluminum–Black alumite processing	Aluminum–Black alumite processing	Aluminum–White alumite processing	Aluminum–White alumite processing	Aluminum–Black alumite processing	Aluminum–Black alumite processing
Weight	0.05kg	0.05kg	0.05kg	0.11kg	0.11kg	0.13kg
Provided screws (Hex socket screws)	4 of M3—8	4 of M3—8	4 of M3—8	4 of M4—8	4 of M4—8	4 of M4—8

■Adaptor plate
B05-A

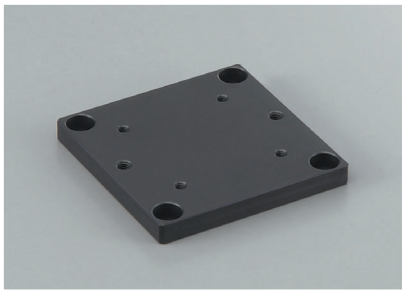

Lower plate for dovetail stage B05-11NHM, B06-11M,B05-41NM,B05-21KM

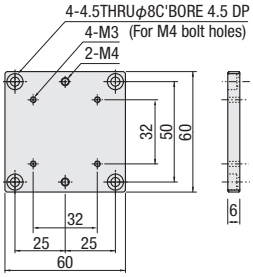

■Adaptor plate
B06-03A

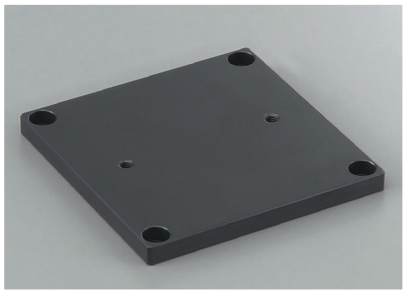

Lower plate for dovetail stage B06-11BM

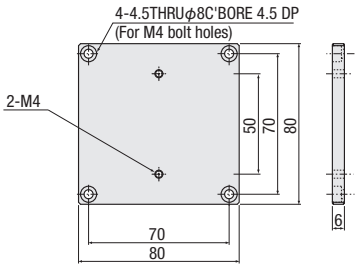

■Spacer □60 for optical axis height matching
A49-A

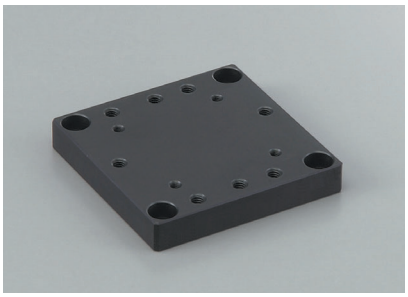

Lower plate for dovetail stage B05-11BM

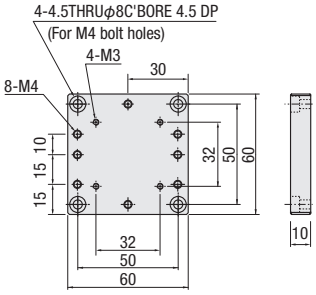

SPEC			
Model	B05-A	B06-03A	A49-A
Main material–Surface finishing	Aluminum–Black alumite processing	Aluminum–Black alumite processing	Aluminum–Black alumite processing
Weight	0.05kg	0.10kg	0.09kg
Provided screws (Hex socket screws)	4 of M4—6	4 of M4—6	4 of M4—10