CAVE-X POSITIONER

X-axis Linear Ball Guide : KXG06020/KXG06030

KXG06020T-C KXG06030T-C KXG06020M-C KXG06030M-C

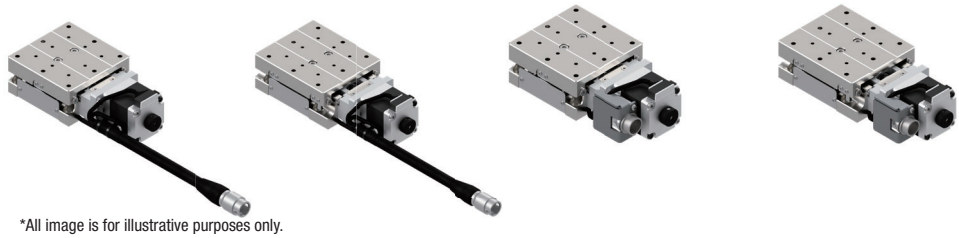

*All image is for illustrative purposes only.

RoHS

Freely customize the motor

KXG06 020 T - C-□
1 2 3 4

MA-□
3 4

Cable P.1-207～
Electrical specification P.C-019～

1 Travel distance

020	20mm
030	30mm

2 Connector specifications

T	Pigtail	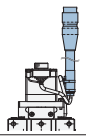
M	Panel Mount	

3 Motor option

Code	Specification
C	Standard
F	High-torque
G	High resolution
H	High-torque・High resolution
MG	With electromagnetic brake(□28)

*Motor option MG: Brake release needs to be controlled by the customer.

4 Cable option (Motor : C・F・G・H・MG)

Code	Specification	Cable type
Blank	Cable is not included (Standard)	—
A	2m	D214-2-2E
B	2m One end loose	D214-2-2EK
C	4m	D214-2-4E
D	4m One end loose	D214-2-4EK
E	Only connector (Cable is not included)	—
F	Robot cable 2m	D214-2-2R
G	Robot cable 2m one end loose	D214-2-2RK
H	Robot cable 4m	D214-2-4R
J	Robot cable 4m one end loose	D214-2-4RK

*Cannot choose MGE in combination with ③ and ④ .
*Motor code: When MG is selected, a brake cable (one end loose robot cable) of the same length as the motor/sensor cable is attached.

3 Motor option

Code	Specification
MA	With electromagnetic brake (□42_100V)
MB	With electromagnetic brake (□42_200V)
PA	αSTEP (AR Series)
ZA	αSTEP (AZ Series)
EA	Motor for EtherCAT
UG	Servo motor(MINAS A6)
UA	Servo motor(J4)

4 Cable option (Motor : MA・MB・PA・ZA・EA・UG・UA)

Code	Specification
Blank	Sensor cable 2m One end loose wire
3	Sensor cable 3m One end loose wire
5	Sensor cable 5m One end loose wire
3A	Driver (Amplifier)/Cable set 3m
5A	Driver (Amplifier)/Cable set 5m

Driver (Amplifier) • Cable option

Code	*Combination	Blank	3	5	3A			5A		
	Motor	MA/MB/PA/ZA/EA/UG/UA			MA/MB	PA/ZA	EA/UG/UA	MA/MB	PA/ZA	EA/UG/UA
Cable	Sensor	2m	3m	5m	3m			5m		
	Motor	Not included			3m			5m		
	Electromagnetic brake				3m	—	—	5m	—	—
	Encoder				—	—	3m	—	—	5m
Driver (Amplifier)		Not included			Included					

*Motor driver (amplifier)/cable combination

Selection Example

Model	Travel distance 20mm	+	Connector T:Pigtail	+	Motor option G:High resolution	+	Cable A:2m	+	▷ KXG06020T-G-A
	KXG06020		KXG06020**T**		KXG06020T-**G**		KXG06020T-G-**A**		

Model	Travel distance 30mm	+	Connector M:Panel Mount	+	Motor option PA:αSTEP (AR)	+	Cable 3A:Driver/Cable set 3m	+	▷ KXG06030M-PA-3A
	KXG06030		KXG06030**M**		KXG06030M-**PA**		KXG06030M-PA-**3A**		

Specification

SPEC					
Model		KXG06020T-C	KXG06020M-C	KXG06030T-C	KXG06030M-C
Mechanical specification	Travel distance	20mm		30mm	
	Stage surface size	60×60mm		60×70mm	
	Connector type	Pigtail	Panel Mount	Pigtail	Panel Mount
	Feed screw (Ball screw)	ϕ8 Lead 1			
	Guide	Linear Ball Guide			
	Main materials-Finishing	Special Steel—Electroless nickel plating			
	Weight	0.72kg	0.71kg	0.82kg	0.81kg
Accuracy specification	Resolution Full/Half	2μm/1μm			
	Resolution Micro step	0.1μm (1/20 On resolution)			
	MAX speed	20mm/sec			
	Uni-directional positioning accuracy accuracyaccuracy	5μm			
	Repeatability positioning accuracy	±0.5μm			
	Load capacity	10kgf【98N】			
	Moment stiffness	Pitch0.08/Yaw0.05/Roll0.05[″/N・cm]		Pitch0.06/Yaw0.05/Roll0.05[″/N・cm]	
	Lost motion	1μm			
	Backlash	1μm			
	Straightness	3μm			
	Parallelism	15μm			
	Motion parallelism	10μm			
	Pitching/Yawing	20″/15″			
Sensor	Limit sensor	Available			
	Origin sensor	Available			
	Slit origin sensor	—			
Provided screw (Hexagon-headed bolt)		4 of M4 - 10			

※ Might be changed specification due to motors.

Resolution・MAX speed・Weight

Motor code		C	F	G	H	MG	MA・MB
Type		Standard	High-torque	High resolution	High-torque・High resolution	With electromagnetic brake□28mm	With electromagnetic brake□42mm
Motor model*3		C005C-90215P-1	PK525HPB-C1	PK523HPMB-C1	PK525HPMB-C1	C103A-90215PM	PKE545MC-A1
Step angle		0.72°		0.36°		0.72°	
Resolution	Full/Half	2μm/1μm		1μm/0.5μm		2μm/1μm	
	Micro step (1/20 On resolution)	0.1μm		0.05μm		0.1μm	
MAX speed		20mm/sec	30mm/sec	20mm/sec	30mm/sec	20mm/sec	25mm/sec
Weight	KXG06020T(Pigtail)	0.72kg	0.81kg	0.72kg	0.81kg	0.77kg	1.15kg
	KXG06020M(Panel Mount)	0.71kg	0.80kg	0.71kg	0.80kg	0.76kg	
	KXG06030T(Pigtail)	0.82kg	0.91kg	0.82kg	0.91kg	0.87kg	1.25kg
	KXG06030M(Panel Mount)	0.81kg	0.90kg	0.81kg	0.90kg	0.86kg	

Motor code		PA	ZA	EA	UG	UA
Type		αSTEP (AR Series)	αSTEP (AZ Series)	Motor for EtherCAT	MINAS A6	J4
Motor model*3		ARM24SAK	AZM24AK	STM28W100A	MSMF5AZL1A2	HG-KR053
Resolution		1μm(1000P/R setting)			23 Bit encoder (8388608P/R)*1	22 Bit encoder (4194304P/R)*2
MAX speed		30mm/sec	40mm/sec	40mm/sec	50mm/sec	
Weight	KXG06020T(Pigtail)	0.75kg		0.72kg	0.96kg	0.98kg
	KXG06020M(Panel Mount)					
	KXG06030T(Pigtail)	0.85kg		0.82kg	1.06kg	1.08kg
	KXG06030M(Panel Mount)					

*1 Optional encoder cable is for incremental system.
*2 When constructing an absolute system, it is necessary to install a battery in the amplifier.
*3 Model is our own management model.

CAVE-X POSITIONER

X-axis Linear Ball Guide: KXG06020/KXG06030

Dimensions

※All image is for illustrative purposes only.

KXG06020T-C

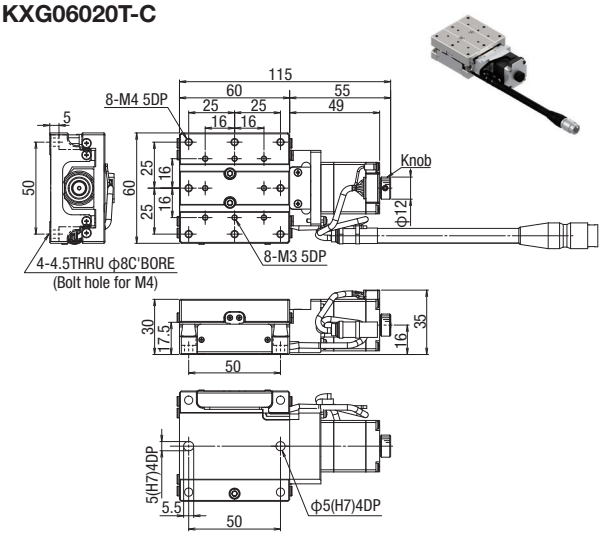

KXG06030T-C

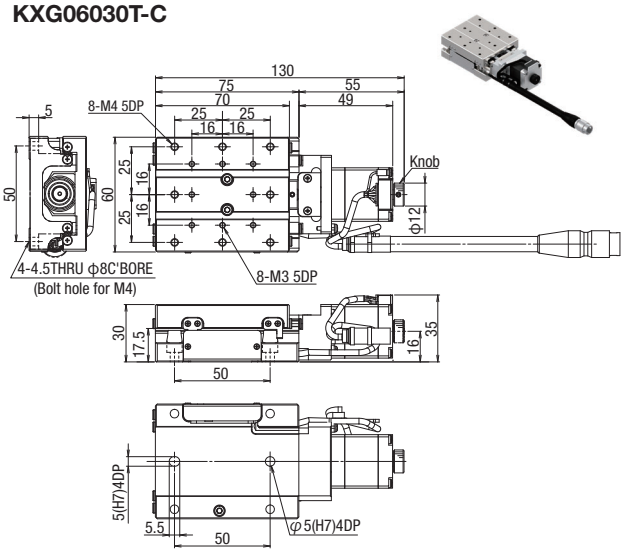

KXG06020M-C

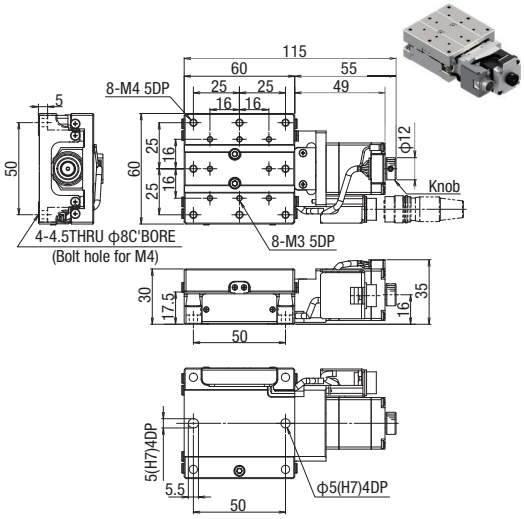

KXG06030M-C

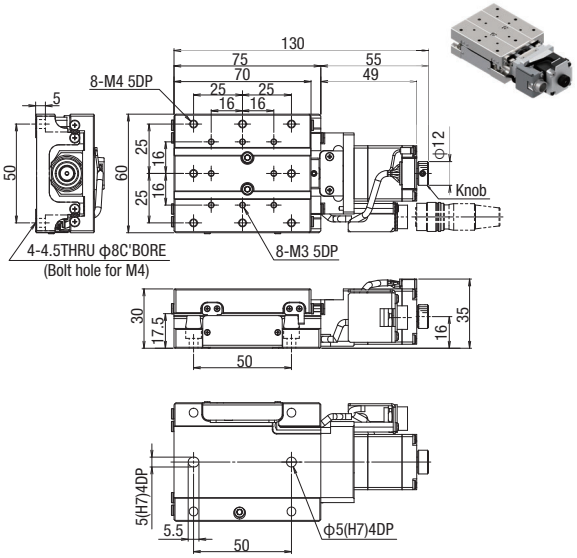

Side view

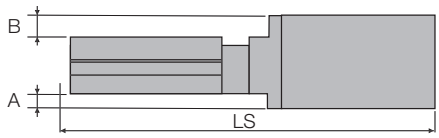

Top view : Connector : T(Pigtail)

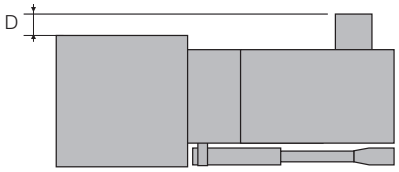

Top view : Connector : M(Panel Mount)

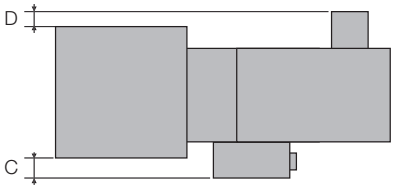

C Standard motor
Motor Model C005C-90215P-1

F High-torque
Motor Model PK525HPB-C1

G High resolution
Motor Model PK523HPMB-C1

H High-torque • High resolution
Motor Model PK525HPMB-C1

Model	Motor code	Motor size	Connector type	A(mm)	B(mm)	C(mm)	D(mm)	LS(mm)	
								*20mm	*30mm
KXG06***T-C	C	□28	T	—	—	—	—	115	130
KXG06***M-C			M						
KXG06***T-F	F	□28	T	—	—	—	—	134.5	149.5
KXG06***M-F			M						
KXG06***T-G	G	□28	T	—	—	—	—	115	130
KXG06***M-G			M						
KXG06***T-H	H	□28	T	—	—	—	—	134.5	149.5
KXG06***M-H			M						

*Travel distance

Dimensions

MG With brake

Motor Model C103A-90215PM

Model	Motor code	Motor size	Connector type	A(mm)	B(mm)	C(mm)	D(mm)	LS(mm)	
								*20mm	*30mm
KXG06***T-MG	MG	□28	T	—	—	—	—	149	164
KXG06***M-MG			M			3.5			

*Travel distance

MA MB With brake

Motor Model PKE545MC-A1

* When the driver is selected MA: 100V, MB: 200V

Model	Motor code	Motor size	Connector type	A(mm)	B(mm)	C(mm)	D(mm)	LS(mm)	
								*20mm	*30mm
KXG06***T-MA(MB)	MA・MB	□42	T	6	6	-	2	163	178
KXG06***M-MA(MB)			M			4			

*Travel distance

PA αSTEP (AR Series)

Motor Model ARM24SAK

ZA αSTEP (AZ Series)

Motor Model AZM24AK

Model	Motor code	Motor size	Connector type	A(mm)	B(mm)	C(mm)	D(mm)	LS(mm)	
								*20mm	*30mm
KXG06***T-PA	PA	□28	T	—	—	-	—	128.5	143.5
KXG06***M-PA			M			3.5			
KXG06***T-ZA	ZA	□28	T	—	—	-	—	138	153
KXG06***M-ZA			M			3.5			

*Travel distance

EA Motor for EtherCAT

Motor Model STM28W100A

Model	Motor code	Motor size	Connector type	A(mm)	B(mm)	C(mm)	D(mm)	LS(mm)	
								*20mm	*30mm
KXG06***T-EA	EA	□28	T	—	—	—	—	143.8	158.8
KXG06***M-EA			M			3.5			

*Travel distance

UG Servo motor MINAS A6 (Panasonic)

Motor Model MSMF5AZL1A2

UA Servo motor J4 (Mitsubishi Electric corporation)

Motor Model HG-KR053

Model	Motor code	Motor size	Connector type	A(mm)	B(mm)	C(mm)	D(mm)	LS(mm)	
								*20mm	*30mm
KXG06***T-UG	UG	□38	T	4	4	—	2	174	189
KXG06***M-UG			M			3.5			
KXG06***T-UA	UA	□40	T	5	5	—	—	168.4	183.4
KXG06***M-UA			M			3.5			

*Travel distance

CAVE-X POSITIONER

Linear Ball Guide: KXG06020/KXG06030

Motor option

C Standard motor
Motor model
C005C-90215P-1

F High-torque
Motor model
PK525HPB-C1

G High resolution
Motor model
PK523HPMB-C1

H High-torque・High resolution
Motor model
PK525HPMB-C1

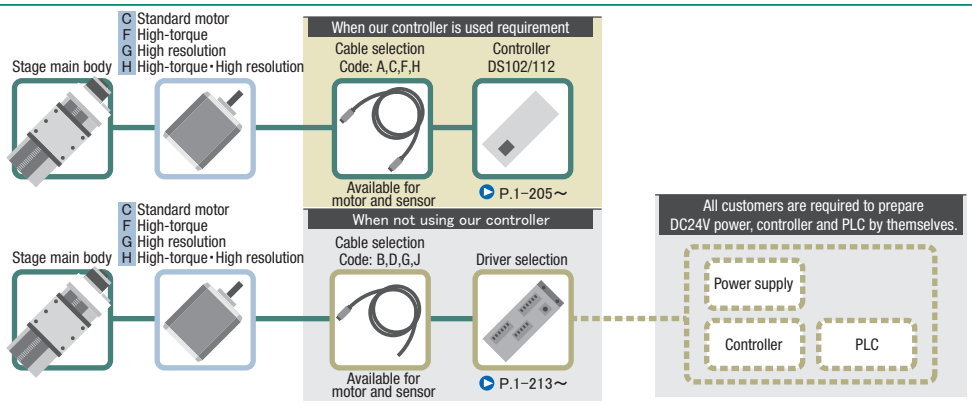

Motor option

MG With electromagnetic brake
Motor model
C103A-90215PM

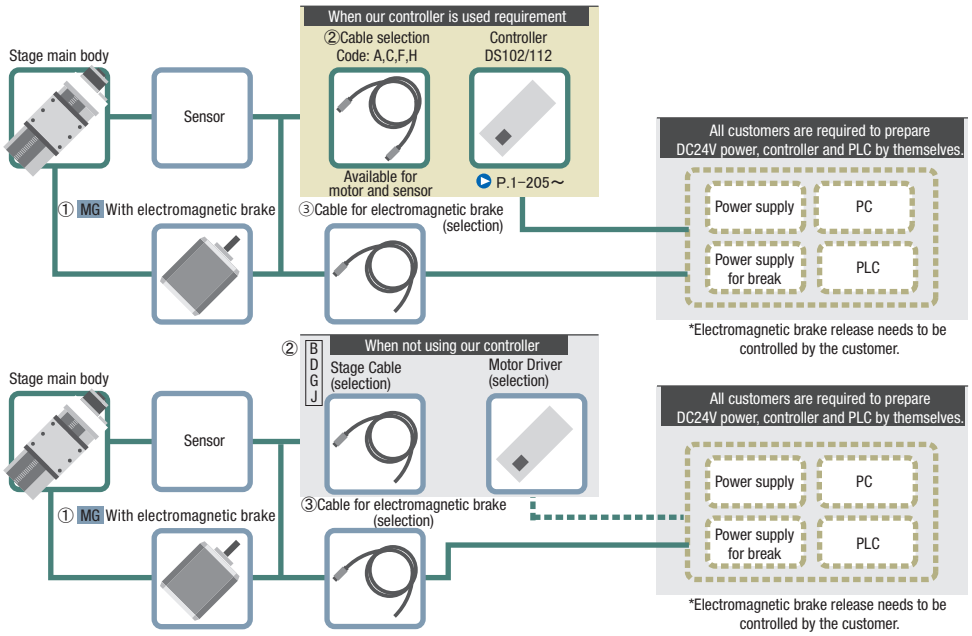

Code	①Motor model	②Motor・Sensor cable selection	③Cable for electromagnetic brake
MG	C103A-90215PM	A・B・C・D：D214-2-□E(K) F・G・H・J：D214-2-□R(K)	BCBL2-S-□ (*)

(*) A brake cable (one end loose robot cable) of the same length as the motor/sensor cable is included.

Motor option

MA With electromagnetic brake
MB
Motor model
PKE545MC-A1
*Driver
MA：100V
MB：200V

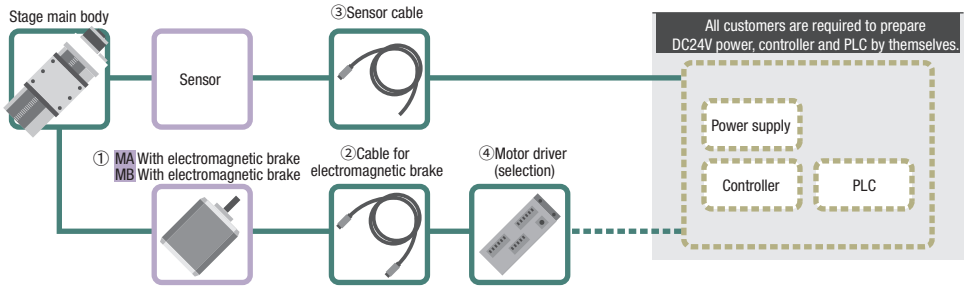

Code	①Motor model	②Cable for electromagnetic brake set (*)	③Sensor cable selection	④Driver selection
MA・MB	PKE545MC-A1	3A：CC030VPFB 5A：CC050VPFB Blank・3・5：Not included	3A・3：HR10AP-S-SB-6-3 5A・5：HR10AP-S-SB-6-5 Blank：HR10AP-S-SB-6-2	[MA]3A・5A：RKSD503M-A [MB]3A・5A：RKSD503M-C Blank・3・5：Not included

(*)Cable for electromagnetic brake and motor cable set.

Motor option

EA Motor for EtherCAT
Motor model
STM28W100A

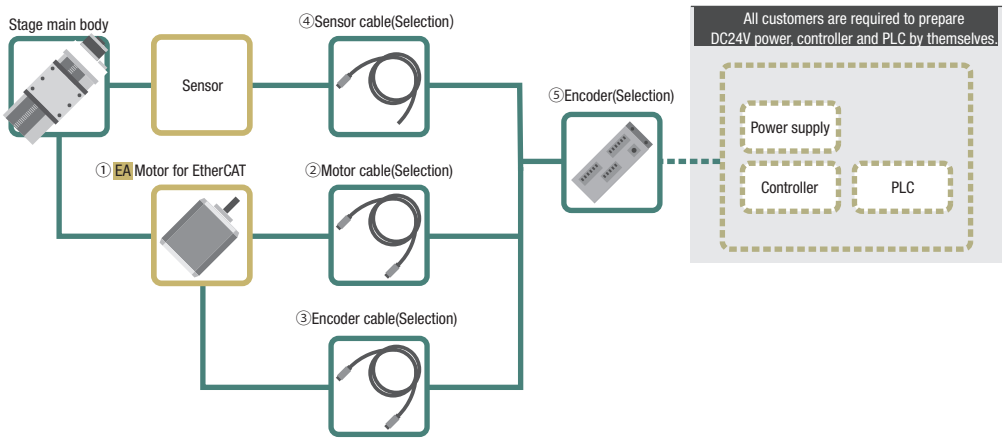

Code	①Motor model	②Motor cable selection	③Encoder cable selection	④Sensor cable selection	④Driver selection
EA	STM28W100A	3A：D214-3-3R2 5A：D214-3-5R2 Blank・3・5：Not included	3A：D214-3-3RE2 5A：D214-3-5RE2 Blank・3・5：Not included	3A・3：HR10AP-S-SB-6-3 5A・5：HR10AP-S-SB-6-5 Blank：HR10AP-S-SB-6-2	3A・5A：DS1000A-EC-28 Blank・3・5：Not included

Motor option

PA αSTEP (AR Series)
Motor model
ARM24SAK

ZA αSTEP (AZ Series)
Motor model
AZM24AK

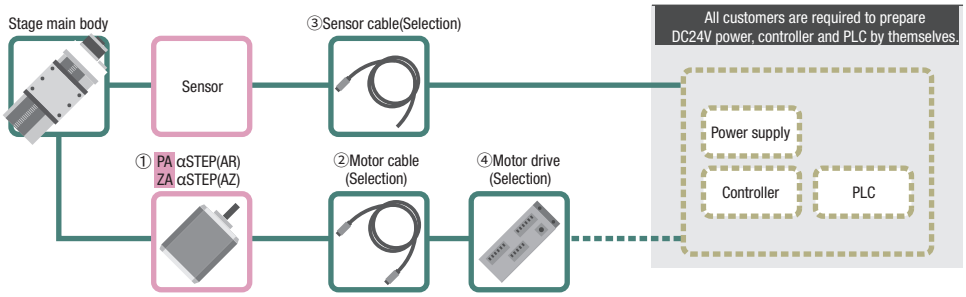

Code	①Motor model	②Motor cable selection	③Sensor cable selection	④Driver selection
PA	ARM24SAK	3A：CC030VA2R2 5A：CC050VA2R2 Blank・3・5：Not included	3A・3：HR10AP-S-SB-6-3 5A・5：HR10AP-S-SB-6-5 Blank：HR10AP-S-SB-6-2	3A・5A：ARD-K Blank・3・5：Not included
ZA	AZM24AK	3A：CC030VZ2R2 5A：CC050VZ2R2 Blank・3・5：Not included		3A・5A：AZD-K Blank・3・5：Not included

Motor option

UG Servo motor
Motor model
MSMF5AZL1A2

UA Servo motor
Motor model
HG-KR053

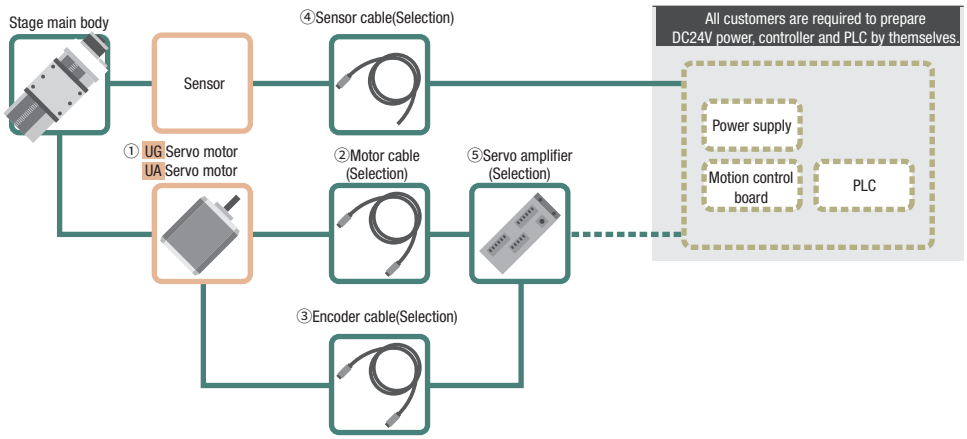

Code	①Motor model	②Motor cable selection	③Encoder cable selection	④Sensor cable selection	⑤AC servo amplifier selection
UG	MSMF5AZL1A2	3A：MFMCA0030EED 5A：MFMCA0050EED Blank・3・5：Not included	3A：MFECA0030EAD 5A：MFECA0050EAD Blank・3・5：Not included	3A・3：HR10AP-S-SB-6-3 5A・5：HR10AP-S-SB-6-5 Blank：HR10AP-S-SB-6-2	3A・5A：MADLT05SF Blank・3・5：Not included
UA	HG-KR053	3A：SVPM-J3HF1-B-3-02S 5A：SVPM-J3HF1-B-5-02S Blank・3・5：Not included	3A：SVEM-J3HF1-B-3 5A：SVEM-J3HF1-B-5 Blank・3・5：Not included		3A・5A：MR-J4-10A Blank・3・5：Not included

CAVE-X POSITIONER

XY-axis Linear Ball Guide: KYG06020/KYG06030

KYG06020T-C KYG06030T-C KYG06020M-C KYG06030M-C

RoHS

Freely customize the motor

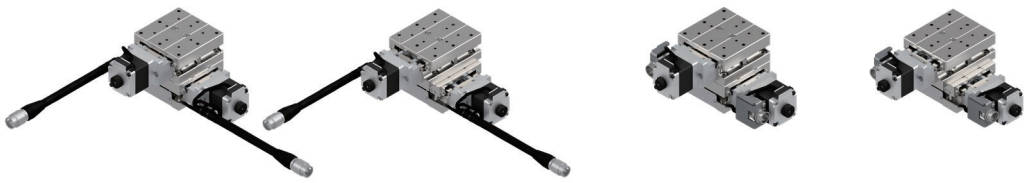

*All image is for illustrative purposes only.

KYG06 020 T - C-□ / MA-□

1 2 3 4 / 3 4

Cable P.1-207～
Electrical specification P.C-019～

1 Travel distance

020	20mm
030	30mm

2 Connector specifications

T	Pigtail	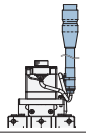
M	Panel Mount	

3 Motor option

Code	Specification
C	Standard
F	High-torque
G	High resolution
H	High-torque・High resolution
MG	With electromagnetic brake(□28)

*Motor option MG: Brake release needs to be controlled by the customer.

4 Cable option (Motor : C・F・G・H・MG)

Code	Specification	Cable type
Blank	Cable is not included (Standard)	—
A	2m	D214-2-2E
B	2m One end loose	D214-2-2EK
C	4m	D214-2-4E
D	4m One end loose	D214-2-4EK
E	Only connector (Cable is not included)	—
F	Robot cable 2m	D214-2-2R
G	Robot cable 2m one end loose	D214-2-2RK
H	Robot cable 4m	D214-2-4R
J	Robot cable 4m one end loose	D214-2-4RK

*Cannot choose MGE in combination with ③ and ④ .
*Motor code: When MG is selected, a brake cable (one end loose robot cable) of the same length as the motor/sensor cable is attached.

3 Motor option

Code	Specification
MA	With electromagnetic brake (□42_100V)
MB	With electromagnetic brake (□42_200V)
PA	αSTEP (AR Series)
ZA	αSTEP (AZ Series)
EA	Motor for EtherCAT
UG	Servo motor(MINAS A6)
UA	Servo motor(J4)

4 Cable option (Motor : MA・MB・PA・ZA・EA・UG・UA)

Code	Specification
Blank	Sensor cable 2m One end loose wire
3	Sensor cable 3m One end loose wire
5	Sensor cable 5m One end loose wire
3A	Driver (Amplifier)/Cable set 3m
5A	Driver (Amplifier)/Cable set 5m

Driver (Amplifier) • Cable option

Code	*Combination	Blank	3	5	3A			5A		
	Motor	MA/MB/PA/ZA/EA/UG/UA			MA/MB	PA/ZA	EA/UG/UA	MA/MB	PA/ZA	EA/UG/UA
Cable	Sensor	2m	3m	5m	3m			5m		
	Motor	Not included			3m			5m		
	Electromagnetic brake				3m	—	—	5m	—	—
	Encoder				—	—	3m	—	—	5m
Driver (Amplifier)		Not included			Included					

*Motor driver (amplifier)/cable combination

Selection Example

Model	Travel distance 20mm	+	Connector T:Pigtail	+	Motor option G:High resolution	+	Cable A:2m	+	▷ KYG06020T-G-A
	KYG06020		KYG06020**T**		KYG06020T-**G**		KYG06020T-G-**A**		

Model	Travel distance 30mm	+	Connector M:Panel Mount	+	Motor option PA:αSTEP (AR)	+	Cable 3A:Driver/Cable set 3m	+	▷ KYG06030M-PA-3A
	KYG06030		KYG06030**M**		KYG06030M-**PA**		KYG06030M-PA-**3A**		

Specification

SPEC					
Model		KYG06020T-C	KYG06020M-C	KYG06030T-C	KYG06030M-C
Mechanical specification	Travel distance	20mm		30mm	
	Stage surface size	60×60mm		60×70mm	
	Connector type	Pigtail	Panel Mount	Pigtail	Panel Mount
	Feed screw (Ball screw)	ϕ8 Lead 1			
	Guide	Linear Ball Guide			
	Main materials-Finishing	Special Steel—Electroless nickel plating			
	Weight	1.44kg	1.42kg	1.64kg	1.62kg
Accuracy specification	Resolution Full/Half	2μm/1μm			
	Resolution Micro step	0.1μm (1/20 On resolution)			
	MAX speed	20mm/sec			
	Load capacity	9kgf【88.2N】			
	Squareness	10μm full stroke		15μm full stroke	
Sensor	Limit sensor	Available			
	Origin sensor	Available			
	Slit origin sensor	–			
Provided screw (Hexagon-headed bolt)		4 of M4 - 10			

Single axis accuracy specification	Uni-directional positioning accuracy accuracyaccuracy	5μm
	Repeatability positioning accuracy	±0.5μm
	Lost motion	1μm
	Backlash	1μm
	Straightness	3μm
	Pitching/Yawing	20″/15″

※ Might be changed specification due to motors.

Resolution・MAX speed・Weight

Motor code		C	F	G	H	MG	MA・MB
Type		Standard	High-torque	High resolution	High-torque・High resolution	With electromagnetic brake□28mm	With electromagnetic brake□42mm
Motor model*3		C005C-90215P-1	PK525HPB-C1	PK523HPMB-C1	PK525HPMB-C1	C103A-90215PM	PKE545MC-A1
Step angle		0.72°		0.36°		0.72°	
Resolution	Full/Half	2μm/1μm		1μm/0.5μm		2μm/1μm	
	Micro step (1/20 On resolution)	0.1μm		0.05μm		0.1μm	
MAX speed		20mm/sec	30mm/sec	20mm/sec	30mm/sec	20mm/sec	25mm/sec
Weight	KYG06020T(Pigtail)	1.44kg	1.62kg	1.44kg	1.62kg	1.54kg	2.30kg
	KYG06020M(Panel Mount)	1.42kg	1.60kg	1.42kg	1.60kg	1.52kg	
	KYG06030T(Pigtail)	1.64kg	1.82kg	1.64kg	1.82kg	1.74kg	2.50kg
	KYG06030M(Panel Mount)	1.62kg	1.80kg	1.62kg	1.80kg	1.72kg	

Motor code		PA	ZA	EA	UG	UA
Type		αSTEP (AR Series)	αSTEP (AZ Series)	Motor for EtherCAT	MINAS A6	J4
Motor model*3		ARM24SAK	AZM24AK	STM28W100A	MSMF5AZL1A2	HG-KR053
Resolution		1μm(1000P/R setting)			23 Bit encoder (8388608P/R)*1	22 Bit encoder (4194304P/R)*2
MAX speed		30mm/sec	40mm/sec	40mm/sec	50mm/sec	
Weight	KYG06020T(Pigtail)	1.50kg		1.44kg	1.92kg	1.96kg
	KYG06020M(Panel Mount)					
	KYG06030T(Pigtail)	1.70kg		1.64kg	2.12kg	2.16kg
	KYG06030M(Panel Mount)					

*1 Optional encoder cable is for incremental system.
*2 When constructing an absolute system, it is necessary to install a battery in the amplifier.
*3 Model is our own management model.

CAVE-X POSITIONER

XY-axis Linear Ball Guide: KYG06020/KYG06030

Dimensions

KYG06020T-C

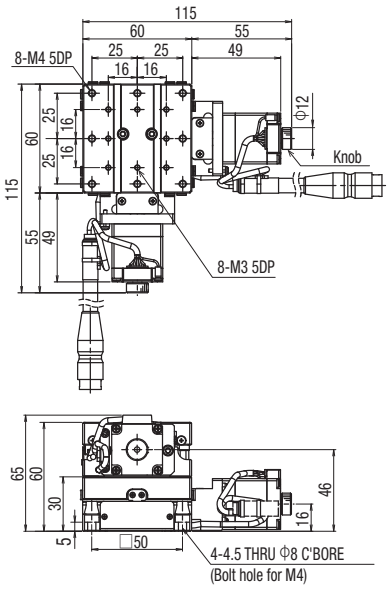

KYG06030T-C

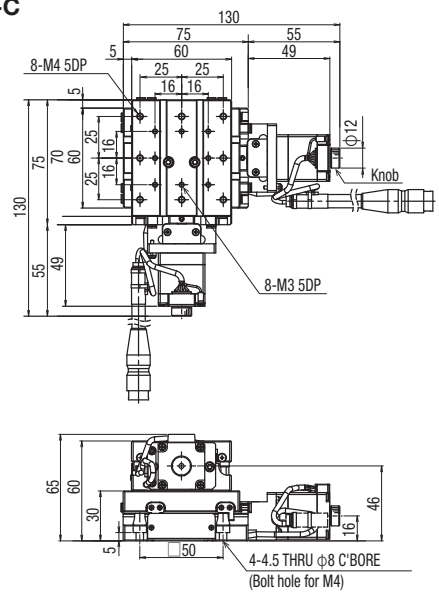

KYG06020M-C

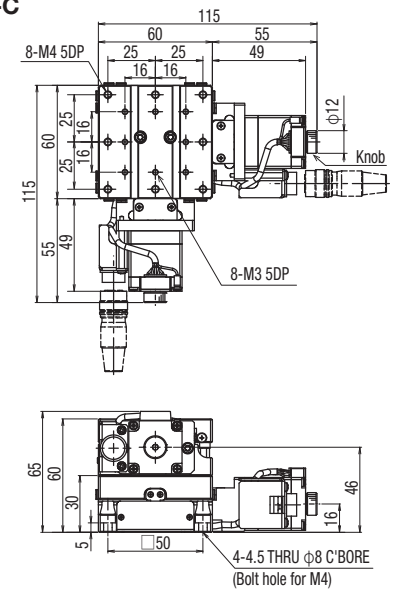

KYG06030M-C

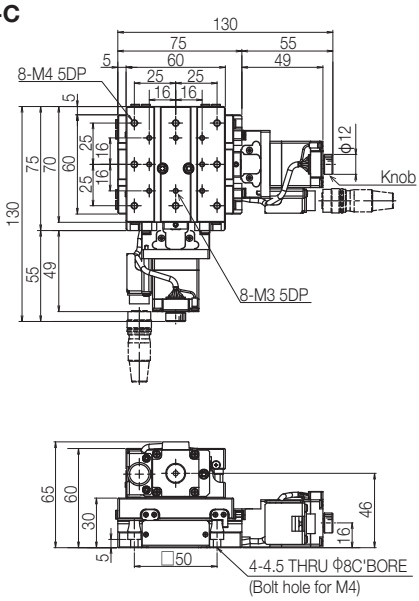

Side view

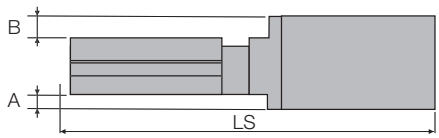

Top view : Connector : T(Pigtail)

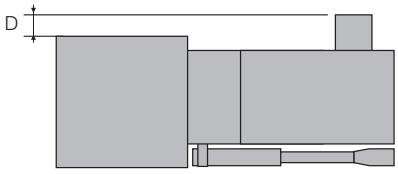

Top view : Connector : M(Panel Mount)

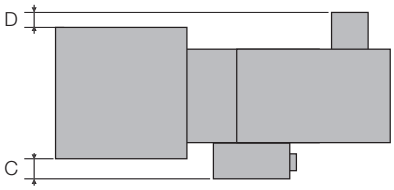

C Standard motor
Motor Model C005C-90215P-1

F High-torque
Motor Model PK525HPB-C1

G High resolution
Motor Model PK523HPMB-C1

H High-torque • High resolution
Motor Model PK525HPMB-C1

Model	Motor code	Motor size	Connector type	A(mm)	B(mm)	C(mm)	D(mm)	LS(mm)	
								*20mm	*30mm
KXG06***T-C	C	□28	T	—	—	—	—	115	130
KXG06***M-C			M						
KXG06***T-F	F	□28	T	—	—	—	—	134.5	149.5
KXG06***M-F			M						
KXG06***T-G	G	□28	T	—	—	—	—	115	130
KXG06***M-G			M						
KXG06***T-H	H	□28	T	—	—	—	—	134.5	149.5
KXG06***M-H			M						

*Travel distance

Dimensions

MG With brake

Motor Model C103A-90215PM

Model	Motor code	Motor size	Connector type	A(mm)	B(mm)	C(mm)	D(mm)	LS(mm) *20mm	LS(mm) *30mm
KXG06***T-MG	MG	□28	T	—	—	—	—	149	164
KXG06***M-MG			M			3.5			

*Travel distance

MA MB With brake

Motor Model PKE545MC-A1

* When the driver is selected MA: 100V, MB: 200V

Model	Motor code	Motor size	Connector type	A(mm)	B(mm)	C(mm)	D(mm)	LS(mm) *20mm	LS(mm) *30mm
KXG06***T-MA(MB)	MA・MB	□42	T	6	6	-	2	163	178
KXG06***M-MA(MB)			M			4			

*Travel distance

PA αSTEP (AR Series)

Motor Model ARM24SAK

ZA αSTEP (AZ Series)

Motor Model AZM24AK

Model	Motor code	Motor size	Connector type	A(mm)	B(mm)	C(mm)	D(mm)	LS(mm) *20mm	LS(mm) *30mm
KXG06***T-PA	PA	□28	T	—	—	-	—	128.5	143.5
KXG06***M-PA			M			3.5			
KXG06***T-ZA	ZA	□28	T	—	—	-	—	138	153
KXG06***M-ZA			M			3.5			

*Travel distance

EA Motor for EtherCAT

Motor Model STM28W100A

Model	Motor code	Motor size	Connector type	A(mm)	B(mm)	C(mm)	D(mm)	LS(mm) *20mm	LS(mm) *30mm
KXG06***T-EA	EA	□28	T	—	—	—	—	143.8	158.8
KXG06***M-EA			M			3.5			

*Travel distance

UG Servo motor MINAS A6 (Panasonic)

Motor Model MSMF5AZL1A2

UA Servo motor J4 (Mitsubishi Electric corporation)

Motor Model HG-KR053

Model	Motor code	Motor size	Connector type	A(mm)	B(mm)	C(mm)	D(mm)	LS(mm) *20mm	LS(mm) *30mm
KXG06***T-UG	UG	□38	T	4	4	—	2	174	189
KXG06***M-UG			M			3.5			
KXG06***T-UA	UA	□40	T	5	5	—	—	168.4	183.4
KXG06***M-UA			M			3.5			

*Travel distance

CAVE-X POSITIONER

Z-axis Linear Ball Guide: KZG06020/KZG06030

KZG06020T-C

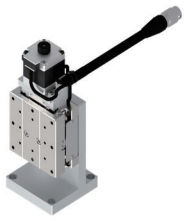

KZG06030T-C

KZG06020M-C

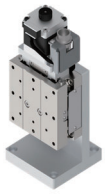

KZG06030M-C

RoHS

Freely customize the motor

*All image is for illustrative purposes only.

KZG06 020 T - C-□

1 2 3 4

MA-□

3 4

Cable P.1-207～
Electrical specification P.C-019～

1 Travel distance

020	20mm
030	30mm

2 Connector specifications

T	Pigtail	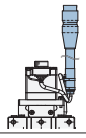
M	Panel Mount	

3 Motor option

Code	Specification
C	Standard
F	High-torque
G	High resolution
H	High-torque・High resolution
MG	With electromagnetic brake(□28)

*Motor option MG: Brake release needs to be controlled by the customer.

4 Cable option (Motor : C・F・G・H・MG)

Code	Specification	Cable type
Blank	Cable is not included (Standard)	—
A	2m	D214-2-2E
B	2m One end loose	D214-2-2EK
C	4m	D214-2-4E
D	4m One end loose	D214-2-4EK
E	Only connector (Cable is not included)	—
F	Robot cable 2m	D214-2-2R
G	Robot cable 2m one end loose	D214-2-2RK
H	Robot cable 4m	D214-2-4R
J	Robot cable 4m one end loose	D214-2-4RK

*Cannot choose MGE in combination with ③ and ④ .
*Motor code: When MG is selected, a brake cable (one end loose robot cable) of the same length as the motor/sensor cable is attached.

3 Motor option

Code	Specification
MA	With electromagnetic brake (□42_100V)
MB	With electromagnetic brake (□42_200V)
PA	αSTEP (AR Series)
ZA	αSTEP (AZ Series)
EA	Motor for EtherCAT
UG	Servo motor(MINAS A6)
UA	Servo motor(J4)

4 Cable option (Motor : MA・MB・PA・ZA・EA・UG・UA)

Code	Specification
Blank	Sensor cable 2m One end loose wire
3	Sensor cable 3m One end loose wire
5	Sensor cable 5m One end loose wire
3A	Driver (Amplifier)/Cable set 3m
5A	Driver (Amplifier)/Cable set 5m

Driver (Amplifier) • Cable option

Code	*Combination	Blank	3	5	3A			5A		
	Motor	MA/MB/PA/ZA/EA/UG/UA			MA/MB	PA/ZA	EA/UG/UA	MA/MB	PA/ZA	EA/UG/UA
Cable	Sensor	2m	3m	5m	3m			5m		
	Motor	Not included			3m			5m		
	Electromagnetic brake				3m	—	—	5m	—	—
	Encoder				—	—	3m	—	—	5m
Driver (Amplifier)		Not included			Included					

*Motor driver (amplifier)/cable combination

Selection Example

Model	Travel distance 20mm	+	Connector T:Pigtail	+	Motor option G:High resolution	+	Cable A:2m	+	▷ KZG06020T-G-A
	KZG06020		KZG06020**T**		KZG06020T-**G**		KZG06020T-G-**A**		

Model	Travel distance 30mm	+	Connector M:Panel Mount	+	Motor option PA:αSTEP (AR)	+	Cable 3A:Driver/Cable set 3m	+	▷ KZG06030M-PA-3A
	KZG06030		KZG06030**M**		KZG06030M-**PA**		KZG06030M-PA-**3A**		

Specification

		SPEC			
Model		**KZG06020T-C**	**KZG06020M-C**	**KZG06030T-C**	**KZG06030M-C**
Mechanical specification	Travel distance	20mm		30mm	
	Stage surface size	60×60mm		60×70mm	
	Connector type	**Pigtail**	**Panel Mount**	**Pigtail**	**Panel Mount**
	Feed screw (Ball screw)	ϕ8 Lead 1			
	Guide	Linear Ball Guide			
	Main materials-Finishing	Special Steel—Electroless nickel plating			
	Weight	1.08kg	1.07kg	1.18kg	1.17kg
Accuracy specification	Resolution Full/Half	2μm/1μm			
	Resolution Micro step	0.1μm (1/20 On resolution)			
	MAX speed	20mm/sec			
	Load capacity (Excitation)	3kgf【29.4N】			
	Perpendicularity	10μm / full stroke		15μm / full stroke	
Sensor	Limit sensor	Available			
	Origin sensor	Available			
	Slit origin sensor	–			
Provided screw (Hexagon-headed bolt)		4 of M4 -10			

Single axis accuracy specification	Uni-directional positioning accuracy accuracyaccuracy	5μm
	Repeatability positioning accuracy	±0.5μm
	Lost motion	1μm
	Backlash	1μm
	Straightness	3μm
	Pitching/Yawing	20″/15″

※ Might be changed specification due to motors.

Resolution・MAX speed・Weight

Motor code		C	F	G	H	MG	MA・MB
Type		Standard	High-torque	High resolution	High-torque・High resolution	With electromagnetic brake□28mm	With electromagnetic brake□42mm
Motor model*3		C005C-90215P-1	PK525HPB-C1	PK523HPMB-C1	PK525HPMB-C1	C103A-90215PM	PKE545MC-A1
Step angle		0.72°		0.36°		0.72°	
Resolution	Full/Half	2μm/1μm		1μm/0.5μm		2μm/1μm	
	Micro step (1/20 On resolution)	0.1μm		0.05μm		0.1μm	
MAX speed		20mm/sec	30mm/sec	20mm/sec	30mm/sec	20mm/sec	25mm/sec
Weight	KZG06020T(Pigtail)	1.08kg	1.17kg	1.08kg	1.17kg	1.13kg	1.51kg
	KZG06020M(Panel Mount)	1.07kg	1.16kg	1.07kg	1.16kg	1.12kg	
	KZG06030T(Pigtail)	1.18kg	1.27kg	1.18kg	1.27kg	1.23kg	1.61kg
	KZG06030M(Panel Mount)	1.17kg	1.26kg	1.17kg	1.26kg	1.22kg	

Motor code		PA	ZA	EA	UG	UA
Type		αSTEP (AR Series)	αSTEP (AZ Series)	Motor for EtherCAT	MINAS A6	J4
Motor model*3		ARM24SAK	AZM24AK	STM28W100A	MSMF5AZL1A2	HG-KR053
Resolution		1μm(1000P/R setting)			23 Bit encoder (8388608P/R)*1	22 Bit encoder (4194304P/R)*2
MAX speed		30mm/sec	40mm/sec	40mm/sec	50mm/sec	
Weight	KZG06020T(Pigtail)	1.11kg		1.08kg	1.32kg	1.34kg
	KZG06020M(Panel Mount)					
	KZG06030T(Pigtail)	1.21kg		1.18kg	1.42kg	1.44kg
	KZG06030M(Panel Mount)					

*1 Optional encoder cable is for incremental system.
*2 When constructing an absolute system, it is necessary to install a battery in the amplifier.
*3 Model is our own management model.

CAVE-X POSITIONER

Z-axis Linear Ball Guide: KZG06020/KZG06030

Dimensions

KZG06020T-C

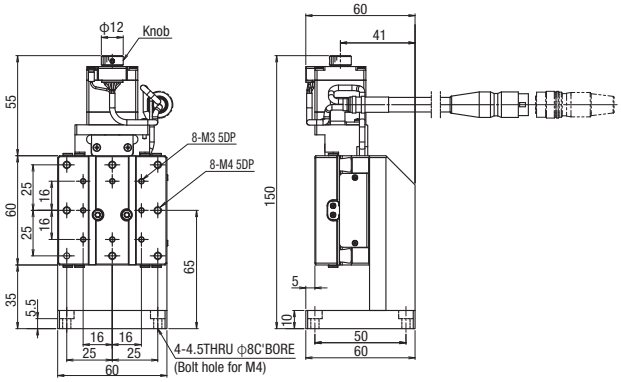

KZG06030T-C

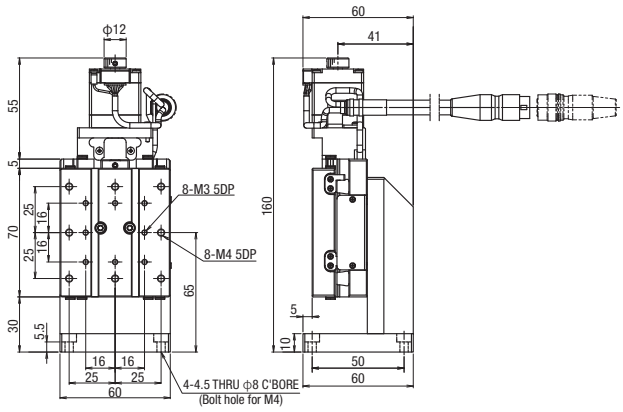

KZG06020M-C

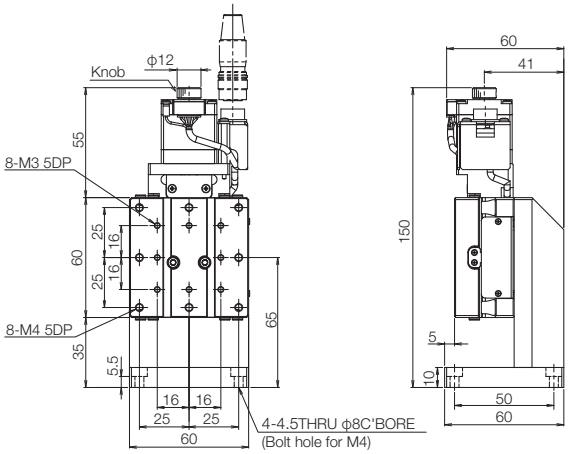

KZG06030M-C

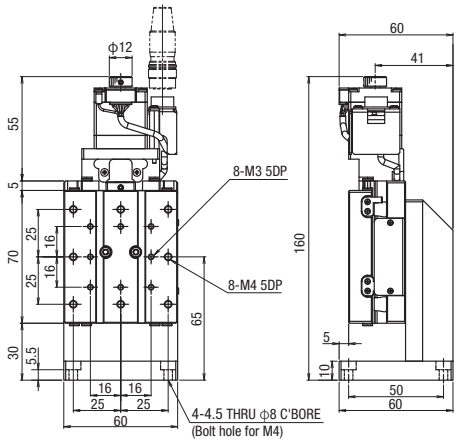

Side view

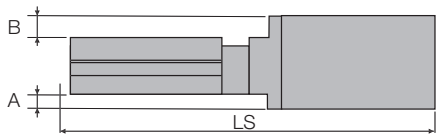

Top view : Connector : T(Pigtail)

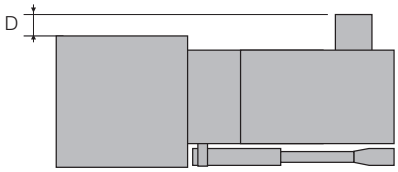

Top view : Connector : M(Panel Mount)

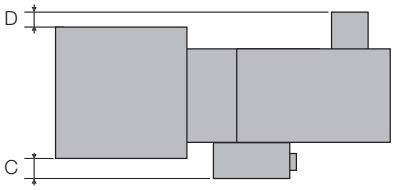

C Standard motor
Motor Model C005C-90215P-1

F High-torque
Motor Model PK525HPB-C1

G High resolution
Motor Model PK523HPMB-C1

H High-torque • High resolution
Motor Model PK525HPMB-C1

Model	Motor code	Motor size	Connector type	A(mm)	B(mm)	C(mm)	D(mm)	LS(mm)	
								*20mm	*30mm
KXG06***T-C	C	□28	T	—	—	—	—	115	130
KXG06***M-C			M						
KXG06***T-F	F	□28	T	—	—	—	—	134.5	149.5
KXG06***M-F			M						
KXG06***T-G	G	□28	T	—	—	—	—	115	130
KXG06***M-G			M						
KXG06***T-H	H	□28	T	—	—	—	—	134.5	149.5
KXG06***M-H			M						

*Travel distance

Dimensions

MG With brake

Motor Model C103A-90215PM

Model	Motor code	Motor size	Connector type	A(mm)	B(mm)	C(mm)	D(mm)	LS(mm)	
								*20mm	*30mm
KXG06***T-MG	MG	□28	T	—	—	—	—	149	164
KXG06***M-MG			M			3.5			

*Travel distance

MA MB With brake

Motor Model PKE545MC-A1

* When the driver is selected MA: 100V, MB: 200V

Model	Motor code	Motor size	Connector type	A(mm)	B(mm)	C(mm)	D(mm)	LS(mm)	
								*20mm	*30mm
KXG06***T-MA(MB)	MA・MB	□42	T	6	6	-	2	163	178
KXG06***M-MA(MB)			M			4			

*Travel distance

PA αSTEP (AR Series)

Motor Model ARM24SAK

ZA αSTEP (AZ Series)

Motor Model AZM24AK

Model	Motor code	Motor size	Connector type	A(mm)	B(mm)	C(mm)	D(mm)	LS(mm)	
								*20mm	*30mm
KXG06***T-PA	PA	□28	T	—	—	-	—	128.5	143.5
KXG06***M-PA			M			3.5			
KXG06***T-ZA	ZA	□28	T	—	—	-	—	138	153
KXG06***M-ZA			M			3.5			

*Travel distance

EA Motor for EtherCAT

Motor Model STM28W100A

Model	Motor code	Motor size	Connector type	A(mm)	B(mm)	C(mm)	D(mm)	LS(mm)	
								*20mm	*30mm
KXG06***T-EA	EA	□28	T	—	—	—	—	143.8	158.8
KXG06***M-EA			M			3.5			

*Travel distance

UG Servo motor MINAS A6 (Panasonic)

Motor Model MSMF5AZL1A2

UA Servo motor J4 (Mitsubishi Electric corporation)

Motor Model HG-KR053

Model	Motor code	Motor size	Connector type	A(mm)	B(mm)	C(mm)	D(mm)	LS(mm)	
								*20mm	*30mm
KXG06***T-UG	UG	□38	T	4	4	—	2	174	189
KXG06***M-UG			M			3.5			
KXG06***T-UA	UA	□40	T	5	5	—	—	168.4	183.4
KXG06***M-UA			M			3.5			

*Travel distance

CAVE-X POSITIONER

XYZ-axis Linear Ball Guide: KWG06020/KWG06030

KWG06020T-C

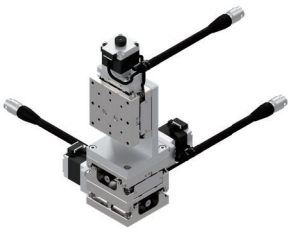

KWG06030T-C

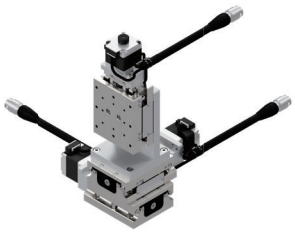

KWG06020M-C

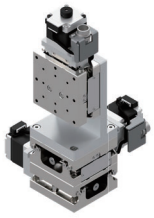

KWG06030M-C

RoHS

Freely customize the motor

*All image is for illustrative purposes only.

KWG06 020 T - C-□

1 2 3 4

MA-□

3 4

Cable P.1-207～
Electrical specification P.C-019～

1 Travel distance

020	20mm
030	30mm

2 Connector specifications

T	Pigtail	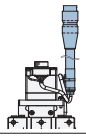
M	Panel Mount	

3 Motor option

Code	Specification
C	Standard
F	High-torque
G	High resolution
H	High-torque・High resolution
MG	With electromagnetic brake(□28)

*Motor option MG: Brake release needs to be controlled by the customer.

4 Cable option (Motor : C・F・G・H・MG)

Code	Specification	Cable type
Blank	Cable is not included (Standard)	—
A	2m	D214-2-2E
B	2m One end loose	D214-2-2EK
C	4m	D214-2-4E
D	4m One end loose	D214-2-4EK
E	Only connector (Cable is not included)	—
F	Robot cable 2m	D214-2-2R
G	Robot cable 2m one end loose	D214-2-2RK
H	Robot cable 4m	D214-2-4R
J	Robot cable 4m one end loose	D214-2-4RK

*Cannot choose MGE in combination with ③ and ④ .
*Motor code: When MG is selected, a brake cable (one end loose robot cable) of the same length as the motor/sensor cable is attached.

3 Motor option

Code	Specification
MA	With electromagnetic brake (□42_100V)
MB	With electromagnetic brake (□42_200V)
PA	αSTEP (AR Series)
ZA	αSTEP (AZ Series)
EA	Motor for EtherCAT
UG	Servo motor(MINAS A6)
UA	Servo motor(J4)

4 Cable option (Motor : MA・MB・PA・ZA・EA・UG・UA)

Code	Specification
Blank	Sensor cable 2m One end loose wire
3	Sensor cable 3m One end loose wire
5	Sensor cable 5m One end loose wire
3A	Driver (Amplifier)/Cable set 3m
5A	Driver (Amplifier)/Cable set 5m

Driver (Amplifier)・Cable option

Code	*Combination	Blank	3	5	3A			5A		
	Motor	MA/MB/PA/ZA/EA/UG/UA			MA/MB	PA/ZA	EA/UG/UA	MA/MB	PA/ZA	EA/UG/UA
Cable	Sensor	2m	3m	5m	3m			5m		
	Motor	Not included			3m			5m		
	Electromagnetic brake				3m	—	—	5m	—	—
	Encoder				—	—	3m	—	—	5m
Driver (Amplifier)		Not included			Included					

*Motor driver (amplifier)/cable combination

Selection Example

Model	Travel distance 20mm	+	Connector T:Pigtail	+	Motor option G:High resolution	+	Cable A:2m	+	▷ KWG06020T-G-A
	KWG06020		KWG06020**T**		KWG06020T-**G**		KWG06020T-G-**A**		

Model	Travel distance 30mm	+	Connector M:Panel Mount	+	Motor option PA:αSTEP (AR)	+	Cable 3A:Driver/Cable set 3m	+	▷ KWG06030M-PA-3A
	KWG06030		KWG06030**M**		KWG06030M-**PA**		KWG06030M-PA-**3A**		

Specification

SPEC					
Model		**KWG06020T-C**	**KWG06020M-C**	**KWG06030T-C**	**KWG06030M-C**
Mechanical specification	Travel distance	20mm		30mm	
	Stage surface size	60×60mm		60×70mm	
	Connector type	**Pigtail**	**Panel Mount**	**Pigtail**	**Panel Mount**
	Feed screw (Ball screw)	ϕ8 Lead 1			
	Guide	Linear Ball Guide			
	Main materials-Finishing	Special Steel—Electroless nickel plating			
	Weight	2.52kg	2.49kg	2.82kg	2.79kg
Accuracy specification	Resolution Full/Half	2μm/1μm			
	Resolution Micro step	0.1μm (1/20 On resolution)			
	MAX speed	20mm/sec			
	Load capacity	3kgf【29.4N】			
	Squareness	10μm / full stroke		15μm / full stroke	
	Perpendicularity	10μm / full stroke		15μm / full stroke	
Sensor	Limit sensor	Available			
	Origin sensor	Available			
	Slit origin sensor	–			
Provided screw (Hexagon-headed bolt)		4 of M4 - 10			

Single axis accuracy specification	Uni-directional positioning accuracy accuracyaccuracy	5μm
	Repeatability positioning accuracy	±0.5μm
	Lost motion	1μm
	Backlash	1μm
	Straightness	3μm
	Pitching/Yawing	20″/15″

※ Might be changed specification due to motors.

Resolution・MAX speed・Weight

Motor code		C	F	G	H	MG	MA・MB
Type		Standard	High-torque	High resolution	High-torque・High resolution	With electromagnetic brake□28mm	With electromagnetic brake□42mm
Motor model*3		C005C-90215P-1	PK525HPB-C1	PK523HPMB-C1	PK525HPMB-C1	C103A-90215PM	PKE545MC-A1
Step angle		0.72°		0.36°		0.72°	
Resolution	Full/Half	2μm/1μm		1μm/0.5μm		2μm/1μm	
	Micro step (1/20 On resolution)	0.1μm		0.05μm		0.1μm	
MAX speed		20mm/sec	30mm/sec	20mm/sec	30mm/sec	20mm/sec	25mm/sec
Weight	KWG06020T(Pigtail)	2.52kg	2.79kg	2.52kg	2.79kg	2.67kg	3.81kg
	KWG06020M(Panel Mount)	2.49kg	2.76kg	2.49kg	2.76kg	2.64kg	
	KWG06030T(Pigtail)	2.82kg	3.09kg	2.82kg	3.09kg	2.97kg	4.11kg
	KWG06030M(Panel Mount)	2.79kg	3.06kg	2.79kg	3.06kg	2.94kg	

Motor code		PA	ZA	EA	UG	UA
Type		αSTEP (AR Series)	αSTEP (AZ Series)	Motor for EtherCAT	MINAS A6	J4
Motor model*3		ARM24SAK	AZM24AK	STM28W100A	MSMF5AZL1A2	HG-KR053
Resolution		1μm(1000P/R setting)			23 Bit encoder (8388608P/R)*1	22 Bit encoder (4194304P/R)*2
MAX speed		30mm/sec	40mm/sec	40mm/sec	50mm/sec	
Weight	KWG06020T(Pigtail)	2.61kg		2.52kg	3.24kg	3.30kg
	KWG06020M(Panel Mount)					
	KWG06030T(Pigtail)	2.91kg		2.82kg	3.54kg	3.60kg
	KWG06030M(Panel Mount)					

*1 Optional encoder cable is for incremental system.
*2 When constructing an absolute system, it is necessary to install a battery in the amplifier.
*3 Model is our own management model.

CAVE-X POSITIONER

XYZ-axis Linear Ball Guide: KWG06020/KWG06030

Dimensions

KWG06020T-C

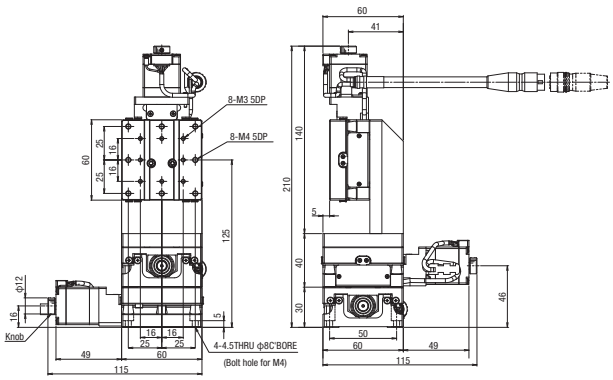

KWG06030T-C

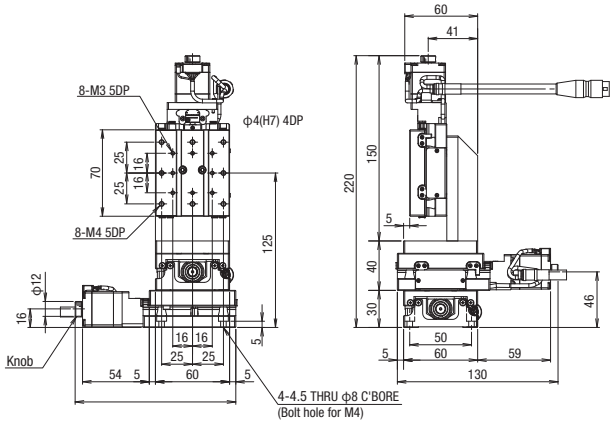

KWG06020M-C

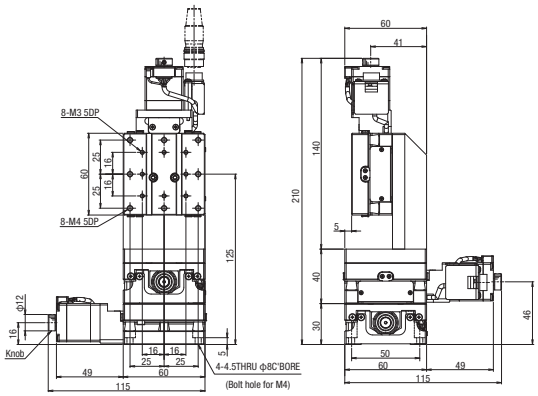

KWG06030M-C

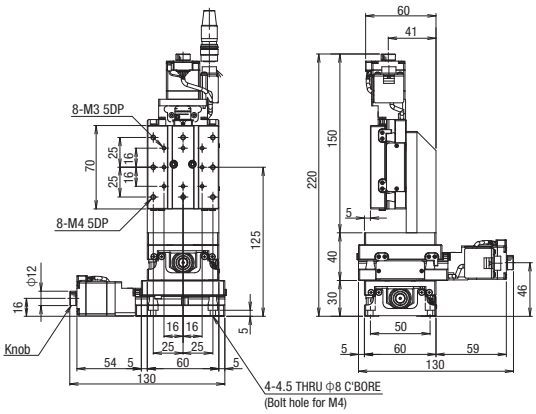

Side view

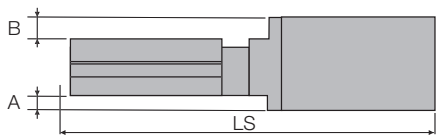

Top view : Connector : T(Pigtail)

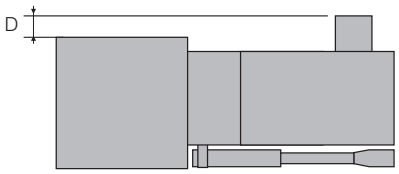

Top view : Connector : M(Panel Mount)

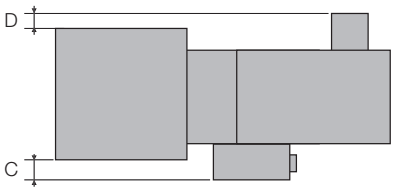

C Standard motor — Motor Model C005C-90215P-1

F High-torque — Motor Model PK525HPB-C1

G High resolution — Motor Model PK523HPMB-C1

H High-torque • High resolution — Motor Model PK525HPMB-C1

Model	Motor code	Motor size	Connector type	A(mm)	B(mm)	C(mm)	D(mm)	LS(mm)	
								*20mm	*30mm
KXG06***T-C	C	□28	T	—	—	—	—	115	130
KXG06***M-C			M						
KXG06***T-F	F	□28	T	—	—	—	—	134.5	149.5
KXG06***M-F			M						
KXG06***T-G	G	□28	T	—	—	—	—	115	130
KXG06***M-G			M						
KXG06***T-H	H	□28	T	—	—	—	—	134.5	149.5
KXG06***M-H			M						

*Travel distance

Dimensions

MG With brake

Motor Model C103A-90215PM

Model	Motor code	Motor size	Connector type	A(mm)	B(mm)	C(mm)	D(mm)	LS(mm) *20mm	LS(mm) *30mm
KXG06***T-MG	MG	□28	T	—	—	—	—	149	164
KXG06***M-MG			M			3.5			

*Travel distance

MA MB With brake

Motor Model PKE545MC-A1

* When the driver is selected MA: 100V, MB: 200V

Model	Motor code	Motor size	Connector type	A(mm)	B(mm)	C(mm)	D(mm)	LS(mm) *20mm	LS(mm) *30mm
KXG06***T-MA(MB)	MA・MB	□42	T	6	6	-	2	163	178
KXG06***M-MA(MB)			M			4			

*Travel distance

PA αSTEP (AR Series)

Motor Model ARM24SAK

ZA αSTEP (AZ Series)

Motor Model AZM24AK

Model	Motor code	Motor size	Connector type	A(mm)	B(mm)	C(mm)	D(mm)	LS(mm) *20mm	LS(mm) *30mm
KXG06***T-PA	PA	□28	T	—	—	-	—	128.5	143.5
KXG06***M-PA			M			3.5			
KXG06***T-ZA	ZA	□28	T	—	—	-	—	138	153
KXG06***M-ZA			M			3.5			

*Travel distance

EA Motor for EtherCAT

Motor Model STM28W100A

Model	Motor code	Motor size	Connector type	A(mm)	B(mm)	C(mm)	D(mm)	LS(mm) *20mm	LS(mm) *30mm
KXG06***T-EA	EA	□28	T	—	—	—	—	143.8	158.8
KXG06***M-EA			M			3.5			

*Travel distance

UG Servo motor MINAS A6 (Panasonic)

Motor Model MSMF5AZL1A2

UA Servo motor J4 (Mitsubishi Electric corporation)

Motor Model HG-KR053

Model	Motor code	Motor size	Connector type	A(mm)	B(mm)	C(mm)	D(mm)	LS(mm) *20mm	LS(mm) *30mm
KXG06***T-UG	UG	□38	T	4	4	—	2	174	189
KXG06***M-UG			M			3.5			
KXG06***T-UA	UA	□40	T	5	5	—	—	168.4	183.4
KXG06***M-UA			M			3.5			

*Travel distance

CAVE-X POSITIONER

Electrical Specification: KXG Series

Motor・Electrical specification(5 phase stepping motor)

Motor code			C	F	G	H
Model (*1)			KXG06020/KXG06030			
Motor Specification (*2)	Type		5 phase stepping motor (0.75A/Phase)			
	Feature		Standard	High-torque	High resolution	High-torque・High resolution
	Model (*3)		C005C-90215P-1	PK525HPB-C1	PK523HPMB-C1	PK525HPMB-C1
	With electromagnetic brake		—			
	Manufacturer		Oriental Motor Co., Ltd.			
	Step angle		0.72°		0.36°	
	Mass		0.11kg	0.2kg	0.11kg	0.2kg
	Motor size	□size	□28mm			
		L size	37mm	56.5mm	37mm	56.5mm
	Max. Holding Torque		0.048N・m	0.073N・m	0.038N・m	0.081N・m
	Driver model		CVD507-K-A9			
	Input power (Voltage・frequency)		DC24V±10%　1.4A(MAX)			
	Electromagnetic Brake Input Power		—			
Connector	Pigtail		HR10A-10J-12P(73) (Hirose Electric Co., Ltd.)			
	Panel Mount		HR10A-10R-12P(73) (Hirose Electric Co., Ltd.)			
	Receiving connector		HR10A-10P-12S(73) (Hirose Electric Co., Ltd.)			
Sensor board	Limit sensor		Available			
	Origin sensor		Available			
	Slit origin sensor		—			
	Sensor model		Photo microsensor EE-SX4320 (Omron Co., Ltd.)			
	Power-supply voltage		DC5～24V±5%			
	Current consumption		Total 60mA or less			
	Control output		NPN open collector output　DC30V 10mA or less			
	Output logic		On detection (light shield condition): Output transistor OFF (Non-continuity)			

(*1) The electric specification of XY (KYG), Z (KZG), XYZ (KWG) are the same.
(*2) See page P.1-213～ for details of single motor specification.
(*3) Model is our own management model.

Pin allocation・Connection diagram

C・F・G・H

Available for motor and sensor

【Pin allocation (common)】
Pigtail　：HR10A-10J-12P(73) (HRS)
Panel Mount：HR10A-10R-12P(73) (HRS)

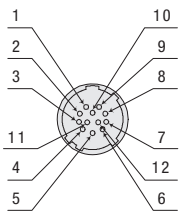

【Pin allocation (common)】

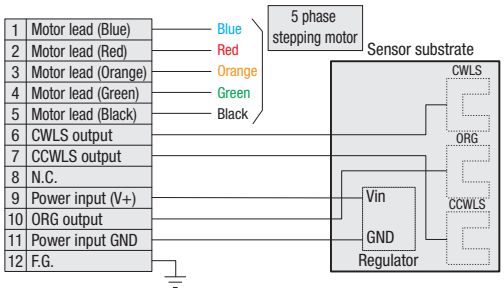

Motor・Electrical specification(With electromagnetic brake)

Motor code			MG	MA	MB
Model (*1)			KXG06020/KXG06030		
Motor Specification (*2)	Type		5 phase stepping motor (0.75A/Phase)	5 phase stepping motor (0.35A/Phase)	
	Feature		With electromagnetic brake □28mm	With electromagnetic brake □42mm	
	Model (*3)		C103A-90215PM	PKE545MC-A1	
	With electromagnetic brake		Available	Available	
	Manufacturer		Oriental Motor Co., Ltd.		
	Step angle		0.72°		
	Mass		0.17kg	0.52kg	
	Motor size	□size	□28mm	□42mm	
		L size	65.5mm	75mm	
	Max. Holding Torque		0.048N・m	0.27N・m	
	Driver model		CVD507-K-A9	RKSD503M-A	RKSD503M-C
	Input power (Voltage・frequency)		DC24V±10% 1.4A(MAX)	Single phase AC100-120V 50/60Hz	Single phase AC200-240V 50/60Hz
	Electromagnetic Brake Input Power		DC24V±5% 0.05A	DC24V±5% 0.08A	
Connector	Pigtail		Motor・Sensor:HR10A-10J-12P(73)(HRS) Electromagnetic brake side:PALR-02VF(JST)	Motor:5557-06R-210(MOLEX) Electromagnetic brake side:5557-02R-210(MOLEX) Sensor:HR10A-7J-6P(73)(HRS)	
	Panel Mount		Motor・Sensor:HR10A-10R-12P(73)(HRS) Electromagnetic brake side:PALR-02VF(JST)	Motor:5557-06R-210(MOLEX) Electromagnetic brake side:5557-02R-210(MOLEX) Sensor:HR10A-7R-6P(73)(HRS)	
	Receiving connector		Motor・Sensor:HR10A-10P-12S(73)(HRS) Electromagnetic brake side:PAP-02V-S(JST)	Motor:5559-06P-210(MOLEX) Electromagnetic brake side:5559-02P-210(MOLEX) Sensor:HR10A-7P-6S(73)(HRS)	
Sensor board	Limit sensor		Available		
	Origin sensor		Available		
	Slit origin sensor		—		
	Sensor model		Photo microsensor EE-SX4320 (Omron Co., Ltd.)		
	Power-supply voltage		DC5～24V±5%		
	Current consumption		Total 60mA or less		
	Control output		NPN open collector output DC30V 10mA or less		
	Output logic		On detection (light shield condition): Output transistor OFF (Non-continuity)		

(*1) The electric specification of XY (KYG), Z (KZG), XYZ (KWG) are the same.
(*2) See page P.1-213～ for details of single motor specification.
(*3) Model is our own management model.

Pin allocation・Connection diagram

MG — Motor Sensor

【Motor・Sensor(common)】 Same as motor model C・F・G・H

MG — Electromagnetic brake side

【Receiver cable】Model:BCBL2-S-□(□ is the length)*Flexible cable

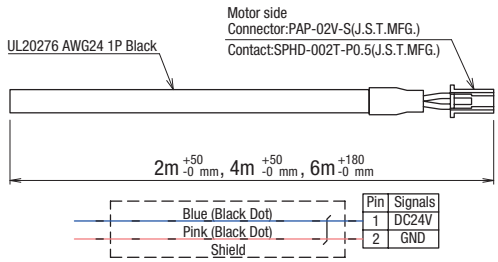

※The shields are disconnected with the connector.

【Electromagnetic brake】

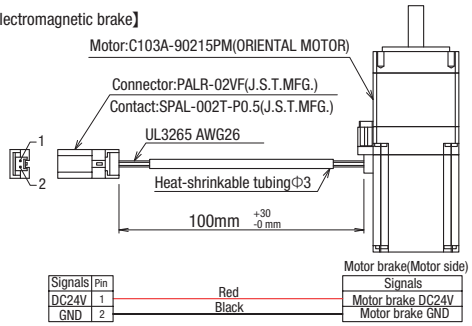

MA・MB — Motor・Electromagnetic brake side

【Receiver cable】Model:CC030VPFB(3m)/CC050VPFB(5m) *for fixing

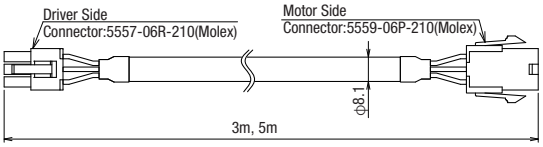

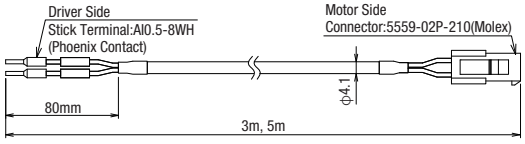

MA・MB — Sensor

【Receiver cable】Model:HR10AP-S-SB-6-□(□ is the length) *for fixing

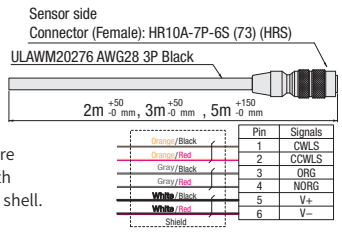

*The shields are connected with the connector shell.

【Pin allocation (common)】
Pigtail:HR10A-7J-6P(73) (HRS)
Panel Mount:HR10A-7R-6P(73) (HRS)

【Connection diagram】

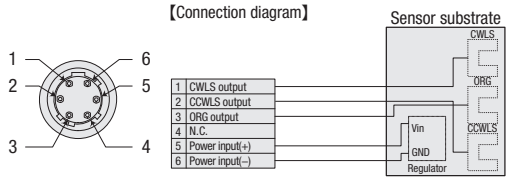

CAVE-X POSITIONER

Electrical Specification: KXG Series

Motor・Electrical specification(αSTEP・Motor for EtherCAT)

Motor code			PA	ZA	EA
Model (*1)			KXG06020/KXG06030		
Motor Specification (*2)	Type		αSTEP (AR Series)	αSTEP (AZ Series)	2 phase closed Loop stepping motor
	Feature		Small step-out ,incremental	Small step-out ,absolute	Small step-out ,incremental,EtherCAT
	Model (*3)		ARM24SAK	AZM24AK	STM28W100A
	With electromagnetic brake		—		
	Manufacturer		Oriental Motor Co., Ltd.		SURUGA SEIKI
	Step angle		0.36°(1000P/R時)		
	Mass		0.15kg	0.15kg	0.12kg
	Motor size	□size	□28mm		
		L size	45mm	54.5mm	59.3mm
	Max. Holding Torque		0.055N・m	0.095N・m	0.085N・m
	Driver model		ARD-K	AZD-K	DS1000A-EC-28
	Input power (Voltage・frequency)		DC24V±10%	DC24V±5%	DC24V±10%
	Electromagnetic Brake Input Power		—		
Connector	Pigtail		Motor:43025-1000 (MOLEX) or 1-794617-0(TE Connectivity) Sensor:HR10A-7J-6P(73)(HRS)	Motor:DF62B-13EP-2.2C(HRS) Sensor:HR10A-7J-6P(73)(HRS)	Motor:B06B-ZESK-D (JST) Encoder:SM08B-GHS-TB (JST) Sensor:HR10A-7J-6P(73)(HRS) Driver I/O Connector Housing:PUDP-24V-S Driver I/O Contact:SPUD-002T-P0.5:SPUD-002T-P0.5
	Panel Mount		Motor:43025-1000 (MOLEX) or 1-794617-0(TE Connectivity) Sensor:HR10A-7R-6P(73)(HRS)	Motor:DF62B-13EP-2.2C(HRS) Sensor:HR10A-7R-6P(73)(HRS)	Motor:B06B-ZESK-D (JST) Encoder:SM08B-GHS-TB (JST) Sensor:HR10A-7R-6P(73)(HRS) Driver I/O Connector Housing:PUDP-24V-S Driver I/O Contact:SPUD-002T-P0.5
	Receiving connector		Motor:43020-1000 (MOLEX) or 1-794615-0(TE Connectivity) Sensor:HR10A-7P-6S(73) (HRS)	Motor:DF62C-13S-2.2C(HRS) Sensor:HR10A-7P-6S(73)(HRS)	Motor:ZER-06V-S (JST) Encoder:GHR-08V-S (JST) Sensor:HR10A-7P-6S(73)(HRS)
Sensor board	Limit sensor		Available		
	Origin sensor		Available		
	Slit origin sensor		—		
	Sensor model		Photo microsensor EE-SX4320 (Omron Co., Ltd.)		
	Power-supply voltage		DC5～24V±5%		
	Current consumption		Total 60mA or less		
	Control output		NPN open collector output DC30V 10mA or less		
	Output logic		On detection (light shield condition): Output transistor OFF (Non-continuity)		

(*1) The electric specification of XY (KYG), Z (KZG), XYZ (KWG) are the same.
(*2) See page P.1-213～ for details of single motor specification.
(*3) Model is our own management model.

Pin allocation・Connection diagram

Motor Code / Motor・Encoder

PA — Motor

【Receiver cable】Model:CC030VA2R2(3m)/CC050VA2R2(5m) *Flexible cable

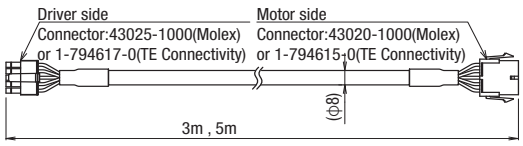

ZA — Motor

【Receiver cable】Model:CC030VZ2R2(3m)/CC050VZ2R2(5m) *Flexible cable

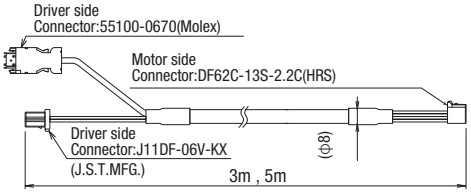

EA — Motor

【Receiver cable】Model:D214-3-3R2(3m)/D214-3-5R2(5m) *Flexible cable

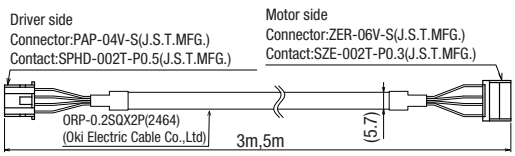

EA — Encoder

【Receiver cable】Model:D214-3-3RE2(3m)/D214-3-5RE2(5m) *Flexible cable

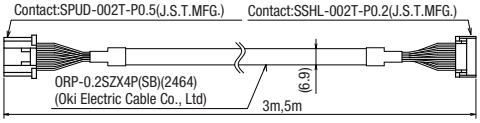

Sensor (common)

【Receiver cable】Model:HR10AP-S-SB-6-□ (□ is the length) *for fixing

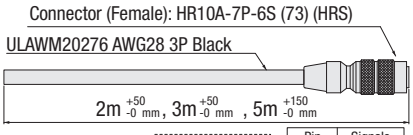

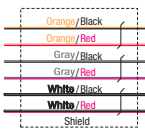

Pin	Signals
1	CWLS
2	CCWLS
3	ORG
4	NORG
5	V+
6	V–

*The shields are connected with the connector shell.

【Pin allocation (common)】
Pigtail:HR10A-7J-6P(73) (HRS)
Panel Mount:HR10A-7R-6P(73) (HRS)

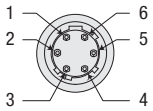

【結線図】

1	CWLS output
2	CCWLS output
3	ORG output
4	N.C.
5	Power input(+)
6	Power input(–)

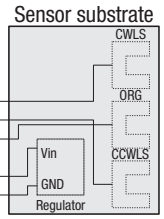

Motor・Electrical specification(Servo motor)

Motor code			UG	UA
Model (*1)			KXG06020/KXG06030	
Motor Specification (*2)	Type		Servo motor	Servo motor
	Feature		High speed	High speed
	Model (*3)		MSMF5AZL1A2	HG-KR053
	With electromagnetic brake		—	
	Manufacturer		Panasonic	Mitsubishi Electric corporation
	Step angle		Both absolute and incremental 23 bits encoder (8388608P/R) (*4)	Both absolute and incremental 22 bits encoder (4194304P/R) (*5)
	Mass		0.32kg	0.34kg
	Motor size	□size	□38mm	□40mm
		L size	72mm	66.4mm
	Maximum torque		0.48N・m	0.56N・m
	Driver model		MADLT05SF	MR-J4-10A
	Input power (Voltage・frequency)		Three and Single phase AC200-240V 50/60Hz	Three and Single phase AC200-240V 50/60Hz
	Electromagnetic Brake Input Power		—	
Connector	Pigtail		Motor: 172167-1(TE Connectivity) Encoder: 172169-1(TE Connectivity) Sensor:HR10A-7J-6P(73)(HRS)	Motor: Manufacturer standard Encoder: Manufacturer standard Sensor:HR10A-7J-6P(73) (HRS)
	Panel Mount		Motor: 172167-1 (TE Connectivity) Encoder: 172169-1 (TE Connectivity) Sensor:HR10A-7R-6P(73)(HRS)	Motor: Manufacturer standard Encoder: Manufacturer standard Sensor:HR10A-7R-6P(73)(HRS)
	Receiving connector		Motor: 172159-1 (TE Connectivity) Encoder: 172161-1 (TE Connectivity) Sensor:HR10A-7P-6S(73)(HRS)	Motor:JN4FT04SJ1-R (JST) Encoder: 1674320-1 (TE Connectivity) Sensor:HR10A-7P-6S(73)(HRS)
Sensor board	Limit sensor		Available	
	Origin sensor		Available	
	Slit origin sensor		—	
	Sensor model		Photo microsensor EE-SX4320 (Omron Co., Ltd.)	
	Power-supply voltage		DC5～24V±5%	
	Current consumption		Total 60mA or less	
	Control output		NPN open collector output DC30V 10mA or less	
	Output logic		On detection (light shield condition): Output transistor OFF (Non-continuity)	

(*1) The electric specification of XY (KYG), Z (KZG), XYZ (KWG) are the same.
(*2) See page P.1-213～ for details of single motor specification.
(*3) Model is our own management model.
(*4) Optional encoder cable is for incremental system.
(*5) When constructing an absolute system, it is necessary to install a battery in the amplifier.

Pin allocation・Connection diagram

Motor Code: UG

UG – Motor – Motor・Encoder

【Receiver cable】Model:MFMCA0030EED(3m)/MFMCA0050EED(5m) *Flexible cable

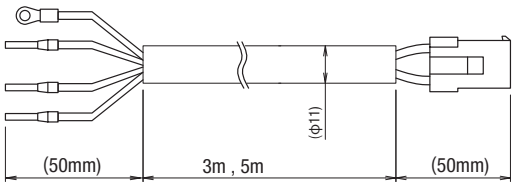

UG – Encoder – Motor・Encoder

【Receiver cable】Model:MFECA0030EAD(3m)/MFECA0050EAD(5m) *for fixing

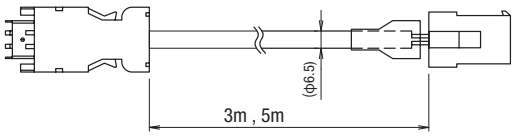

Sensor (common)

【Receiver cable】Model:HR10AP-S-SB-6-□ (□ is the length) *for fixing

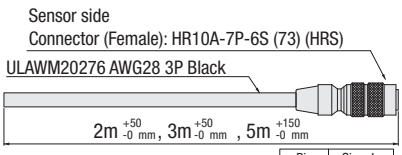

*The shields are connected with the connector shell.

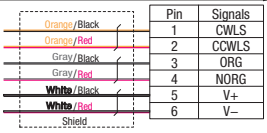

Pin	Signals
1	CWLS
2	CCWLS
3	ORG
4	NORG
5	V+
6	V–

【Pin allocation】
Pigtail:HR10A-7J-6P(73) (HRS)
Panel Mount:HR10A-7R-6P(73) (HRS)

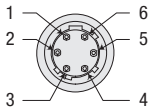

UA – Motor – Motor・Encoder

【Receiver cable】Model:SVPM-J3HF1-B-□-02S *Flexible cable

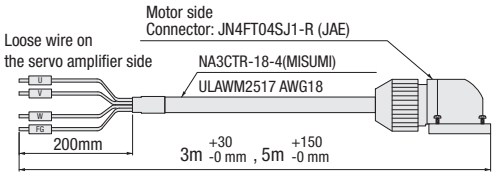

UA – Encoder – Motor・Encoder

【Receiver cable】Model:SVEM-J3HF1-B-□ *Flexible cable

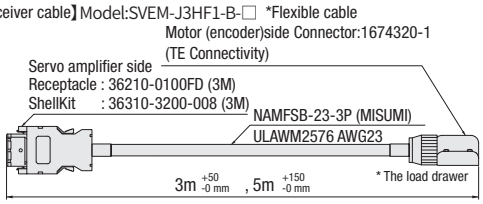

【結線圖】

1	CWLS output
2	CCWLS output
3	ORG output
4	N.C.
5	Power input(+)
6	Power input(–)

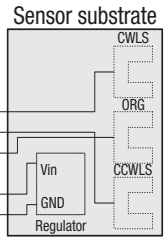

CAVE-X POSITIONER

Electrical Specification: KXG Series

Timing chart

KXG06020

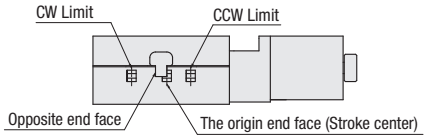

KXG06030

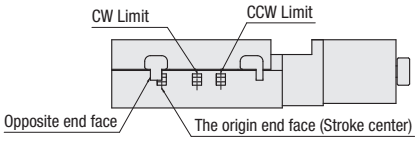

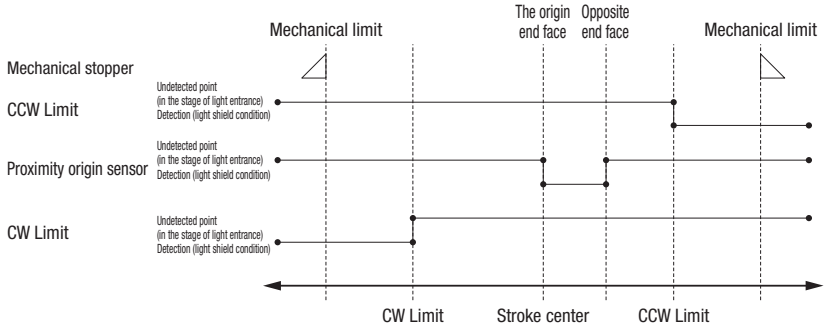

Unit [mm] Direction of CW ◀——▶ Direction of CCW

	Reference coordinate	Mechanical limit	CW Limit	The origin end face Stroke center	Opposite end face	CCW Limit	Mechanical limit
KXG06020	Return to origin	11.5	10.5	0	5	10.5	11.5
KXG06030	Return to origin	16.5	15.5	0	5	15.5	16.5

* Return to origin means that is performed return to origin type 4 using DS102/DS112 series.
* The coordinate value should be on the design. Dimension error may occur about plus or minus 0.5 mm.

Note: The timing chart shows only timing of sensor, it is not for output signal logic.
Refer to ON/OFF display of output transistor that shows on electrical specifications-sensor-output logic for output signal logic.

Return to origin method

Suruga's motorized stages is different from the wire connection as the number of sensors depending on models. It is necessary to choose type to suit correctly as return to origin operation is devided into same types. Selected wrong type may be operated incorrectly. Choose your best one whatever you need according to be recommended as below.

■KXG06020/KXG06030 recommended return to origin Return to origin sequence ▶P.1-201～

Type 3: Detect in the direction of CCW and perform detected process for CCW edge of ORG signal.
Type 4: Detect in the direction of CW and perform detected process for CW edge of ORG signal.
Type 9: After finished Type3, perform detected process for CCW edge of TIMING signal.
Type 10: After finished Type4, perform detected process for CW edge of TIMING signal.

[Type3]

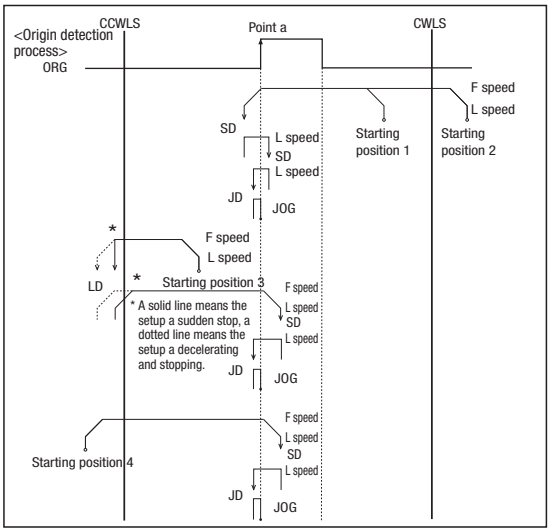

[Type4]

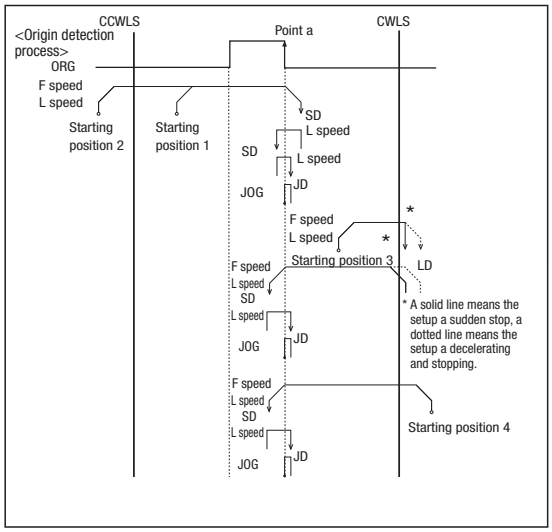

Connectin example

■ Connection example 1 Motorized Stage 1axis: When holding a terminal device (using control software)

*USB cable connection between PC and controller.

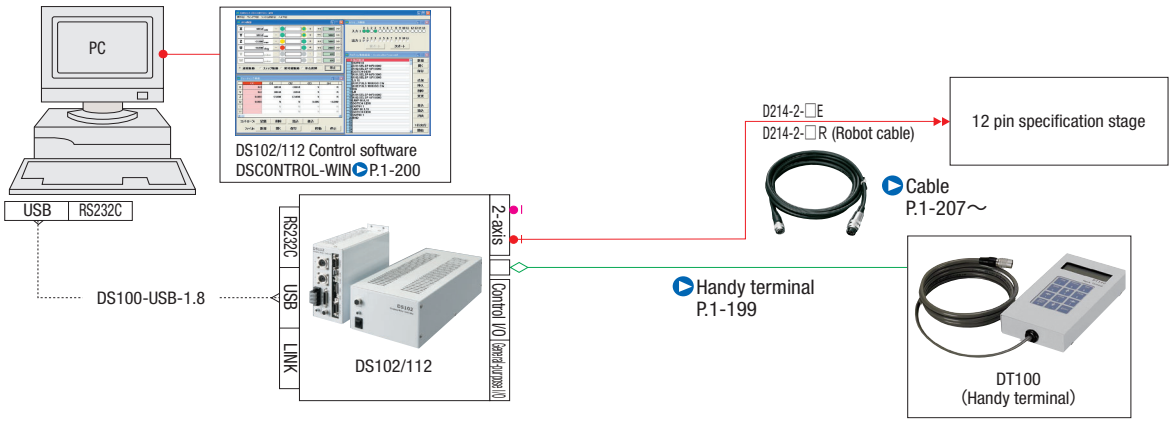

■ Connection example 2 Motorized Stage 4axis: When holding a terminal device (using control software)

*USB cable connection between PC and controller.

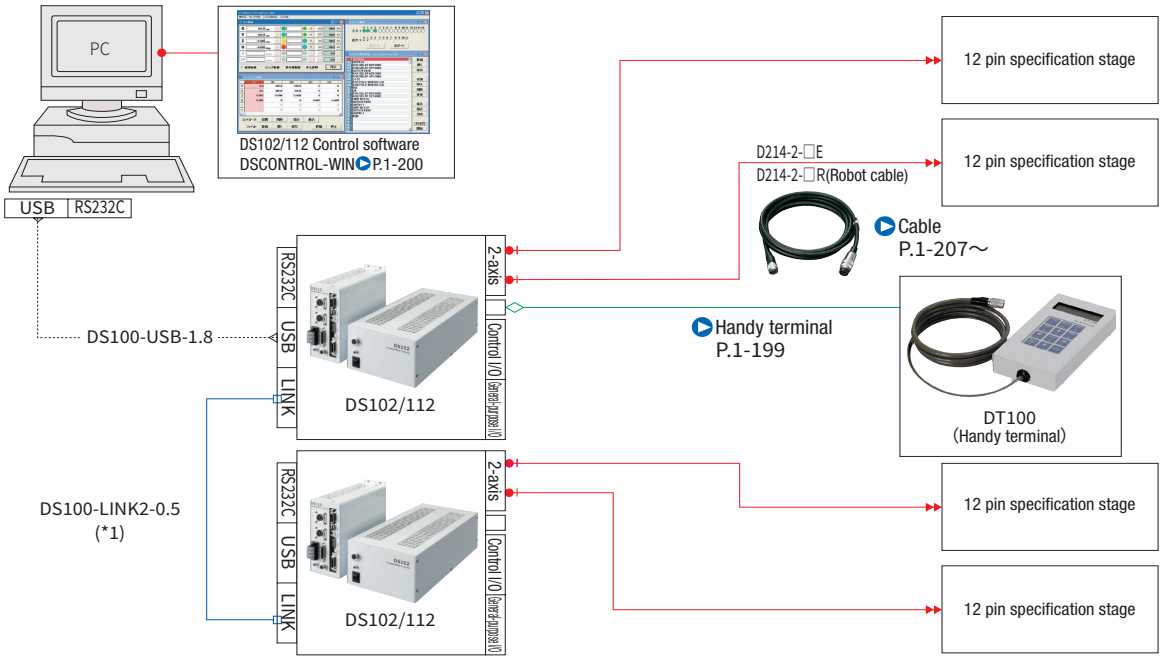

(*1) It is possible to control up to 3 controllers (for a maximum of 6-axis control) with link function.

■ Connection example 3 When controlling from the PLC I/O Unit.

*USB cable connection between PC and controller.

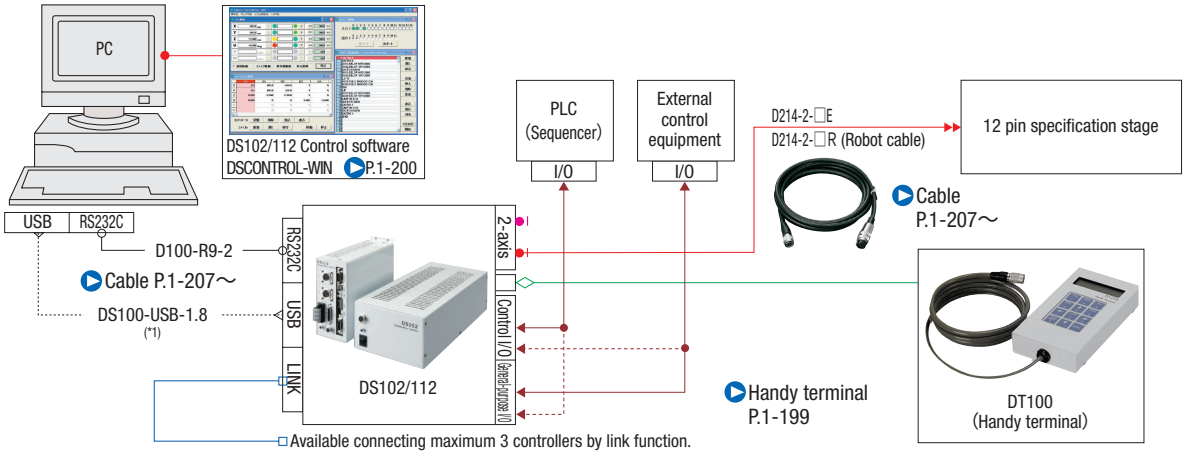

(*1) Using the USB hub, it is controllable in a single PC to up to four link networks (24-axis).

CAVE-X POSITIONER

X-axis Linear Ball Guide: KXL06030/KXL06050/KXL06075

KXL06030-N

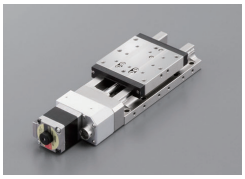

KXL06050-N

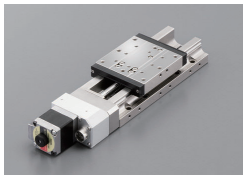

KXL06075-N

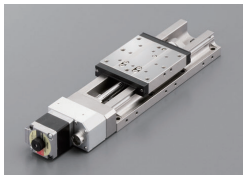

KXL06030-C

KXL06050-C

KXL06075-C

Freely customize the motor

RoHS

See page P.009

■The drive unit areas are coated in clean grease.

Model / Selection code / Option code

KXL06 030-N1-C□□

1 2 3 4 5 6

Cable P.1-207～
Electrical specification P.1-077～

1 Travel length

030	30mm
050	50mm
075	75mm

2 Cover type

N	Uncovered	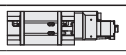
C	Covered	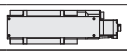

3 Ball screw lead selection

1	Lead 1mm
2	Lead 2mm

4 Motor option

Code	Specification
C	Standard
F	High-torque
G	High resolution
MA	With electromagnetic brake (Driver set)
PA	α Step (Driver set)
UA	Servo motor (Amplifier set)

* Code MA•PA•UA is the set of driver and cable.
* See page P.1-077~ for details of motor option.

5 Origin sensor option

Code	Specification
Blank	None
1	CCW right side
2	CCW left side
3	Center right side
4	Center left side
5	CW right side
6	CW left side

* See page P.1-079~ for details of origin sensor option.

■Position of origin sensor option (Please choose one position)

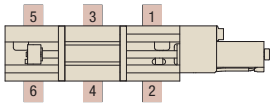

6 Cable option

Code	Specification	Cable type
A	2m	D214-2-2E
B	2m One end loose	D214-2-2EK
C	4m	D214-2-4E
D	4m One end loose	D214-2-4EK
E	Only connector (Cable is not included)	—
F	Robot cable 2m	D214-2-2R
G	Robot cable 2m one end loose	D214-2-2RK
H	Robot cable 4m	D214-2-4R
J	Robot cable 4m one end loose	D214-2-4RK
M	Cable for electromagnetic brake	—
P	Cable for α step	
U	Cable for servo motor	
Blank	Cable is not included (Standard)	—

* One end loose position to only stage opposite side.
* The price includes M, P and U.
  Not available non-cable.
* See page P.1-207,209~ for details of cable.
* Please select "Code A, C, F or H" when connect with stepping motor controller(DS102/112).

[Note]
Please check available cable from compatibility list.
Not included cable for a main body. Please choose the code as below.

	Motor code	Cable code
Motor/cable products list	C,F,G	Blank, A～H,J
	MA	M
	PA	P
	UA	U

SPEC

Model	Uncovered	KXL06030-N1-C	KXL06030-N2-C	KXL06050-N1-C	KXL06050-N2-C	KXL06075-N1-C	KXL06075-N2-C
	Covered	KXL06030-C1-C	KXL06030-C2-C	KXL06050-C1-C	KXL06050-C2-C	KXL06075-C1-C	KXL06075-C2-C
Mechanical specification	Travel length	30mm		50mm		75mm	
	Table size	60×60mm					
	Feed screw (Ball screw)	φ8 lead 1	φ8 lead 2	φ8 lead 1	φ8 lead 2	φ8 lead 1	φ8 lead 2
	Guide	Linear ball guide					
	Main materials-Finishing	Stainless—Opposite side of the end face finishing					
	Weight Uncovered	1.28kg		1.40kg		1.54kg	
	Weight Covered	1.34kg		1.44kg		1.60kg	
Accuracy specification	Resolution (Pulse) Full/Half	2μm/1μm	4μm/2μm	2μm/1μm	4μm/2μm	2μm/1μm	4μm/2μm
	Resolution (Pulse) Microstep	0.1μm (1/20 on resolution)	0.2μm (1/20 on resolution)	0.1μm (1/20 on resolution)	0.2μm (1/20 on resolution)	0.1μm (1/20 on resolution)	0.2μm (1/20 on resolution)
	MAX speed	30mm/sec	35mm/sec	30mm/sec	35mm/sec	30mm/sec	35mm/sec
	Uni-directional positioning accuracy	Within 5μm				Within 7μm	
	Repeatability positioning accuracy	Within ±0.5μm					
	Load capacity	12kgf [117.6N]					
	Moment stiffness	Pitch 0.05/yaw 0.05/roll 0.05 [″/N・cm]					
	Lost motion	Within 1μm					
	Backlash	Within 1μm					
	Straightness	Within 3μm					
	Parallelism	Within 15μm					
	Motion parallelism	Within 10μm					
	Pitching/Yawing	2Within 0″/Within 15″					
Sensor	Limit sensor	Installed					
	Origin sensor	— *Attachable in the origin sensor option					
	Slit origin sensor	—					
Provided screw (Hexagon-headed bolt)		8 of M4—14					

* Might be changed specification due to motors. See page P.1-213~ for details.

Motor option

C Standard motor
Motor model
C005C-90215P-1

F High-torque
Motor model
PK525HPB-C1

G High resolution
Motor model
PK523HPMB-C1

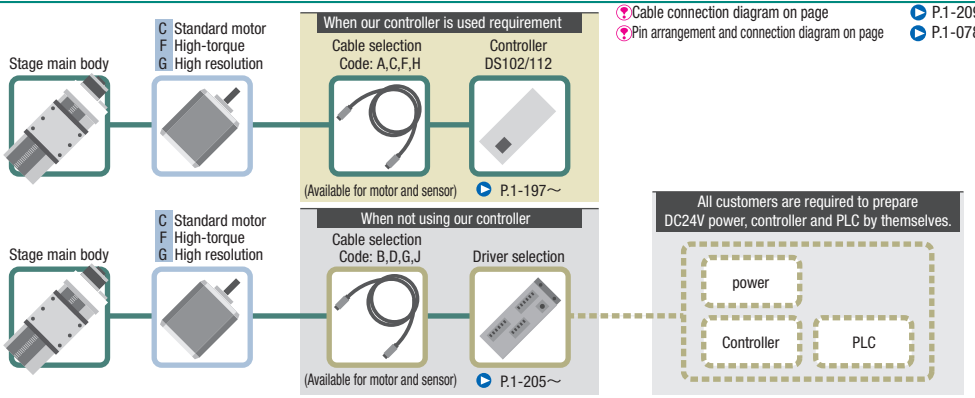

Cable connection diagram on page P.1-209~
Pin arrangement and connection diagram on page P.1-078~

Motor option

MA With electromagnetic brake
Motor model
PKE545MC-A1

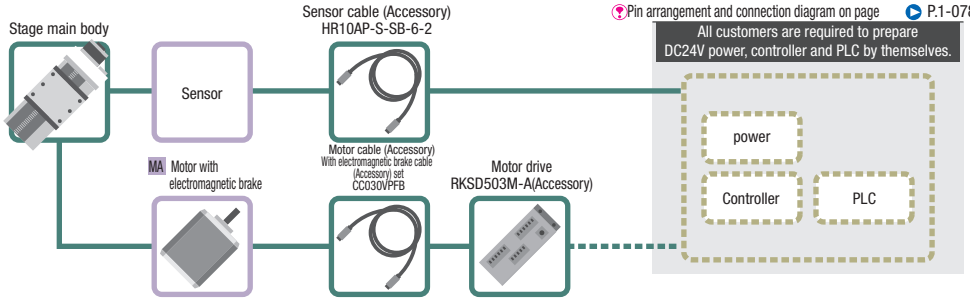

Cable connection diagram on page P.1-209~
Pin arrangement and connection diagram on page P.1-078~

Motor option

PA α Step
Motor model
ARM24SAK

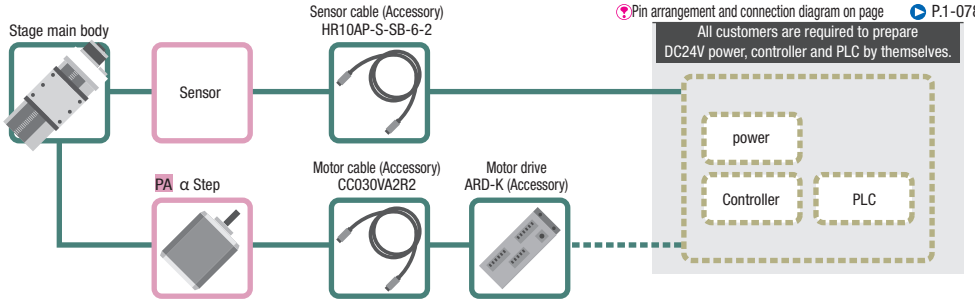

Cable connection diagram on page P.1-209~
Pin arrangement and connection diagram on page P.1-078~

Motor option

UA AC servo motor
Motor model
HG-KR053

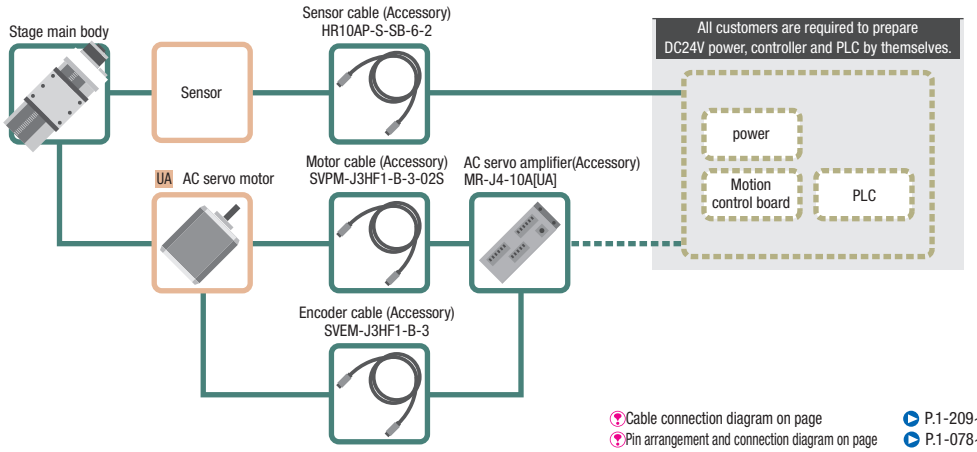

Cable connection diagram on page P.1-209~
Pin arrangement and connection diagram on page P.1-078~

Motor code			C	F	G	MA	PA	UA
Feature			Standard	High-torque	High resolution	With electromagnetic brake	Small step-out	High speed
Type			5 phase stepping motor 0.75A/ Phase			5 phase 0.35A/phase	α step motor	AC servo motor
Motor model*			**C005C-90215P-1**	**PK525HPB-C1**	**PK523HPMB-C1**	**PKE545MC-A1**	**ARM24SAK**	**HG-KR053**
Resolution	Lead 1mm	Full/Half	2μm/1μm		1μm/0.5μm	2μm/1μm	1μm(Set to 1000P/R)	22 bits encoder (4194304P/R)
		Micro step (1/20 split)	0.1μm		0.05μm	0.1μm	—	
	Lead 2mm	Full/Half	4μm/2μm		2μm/1μm	4μm/2μm	2μm(Set to 1000P/R)	
		Micro step (1/20 split)	0.2μm		0.1μm	0.2μm	—	
	Max. speed	Lead 1mm	30mm/sec	35mm/sec	25mm/sec	25mm/sec	40mm/sec	50mm/sec
		Lead 2mm	35mm/sec	45mm/sec	30mm/sec	40mm/sec	80mm/sec	100mm/sec

* Model is our own management model.

CAVE-X POSITIONER

X-axis Linear Ball Guide: KXL06030/KXL06050/KXL06075

Dimensional outline drawings

KXL06030-N1-C (KXL06030-N2-C)

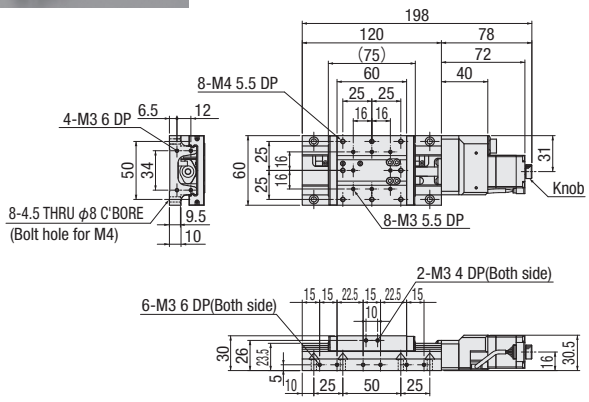

KXL06030-C1-C (KXL06030-C2-C)

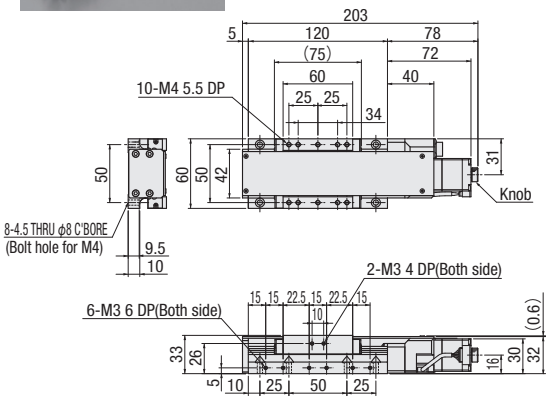

KXL06050-N1-C (KXL06050-N2-C)

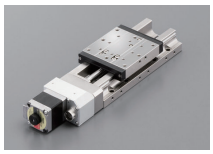

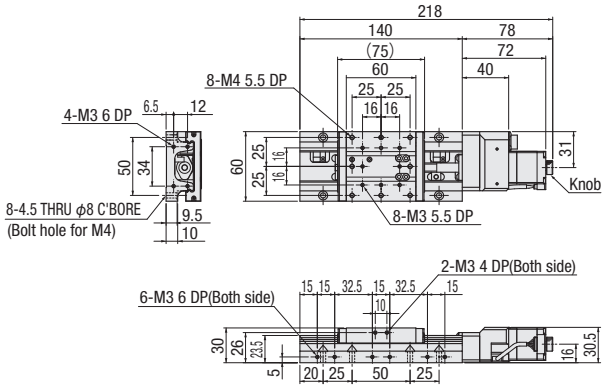

KXL06050-C1-C (KXL06050-C2-C)

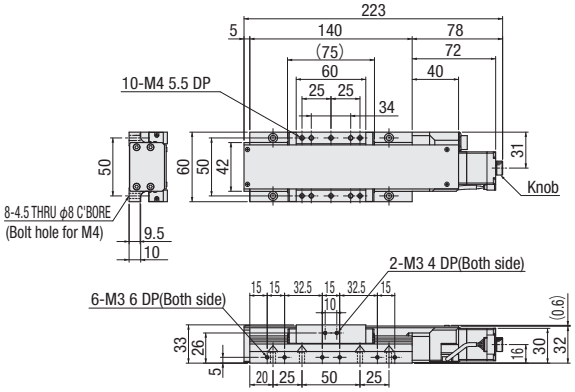

KXL06075-N1-C (KXL06075-N2-C)

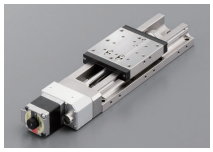

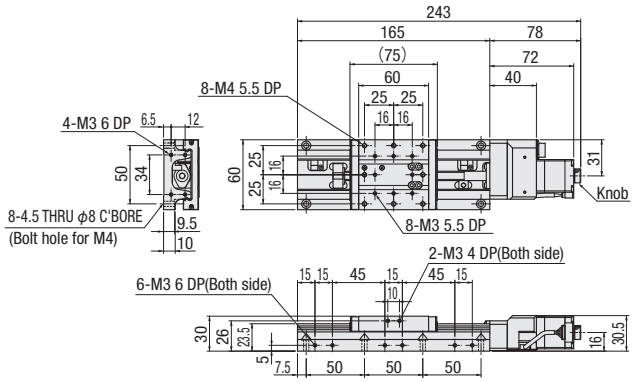

KXL06075-C1-C (KXL06075-C2-C)

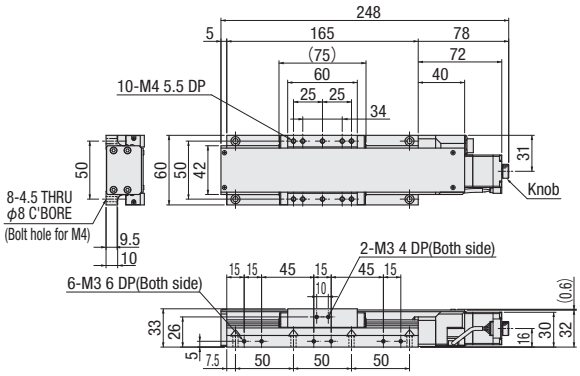

CAD PART COMMUNITY CAD DATA SURUGA SEIKI CAD 3D·2D

Dimensional outline drawings

C Standard

Motor model C005C-90215P-1

F High-torque

Motor model PK525HPB-C1

G High resolution

Motor model PK523HPMB-C1

Side view

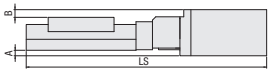

Top view

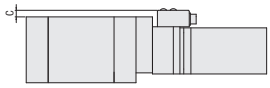

Uncovered

Model	C (Standard) /F (High-torque) / G (High resolution) Common				C (Standard)	F (High-torque)	G (High resolution)
	Motor size	A	B	C	LS		
KXL06030-N□-C,F,G	□28	—	—	—	198	218	198
KXL06050-N□-C,F,G					218	238	218
KXL06075-N□-C,F,G					243	263	243

Covered

Model	C (Standard) /F (High-torque) / G (High resolution) Common				C (Standard)	F (High-torque)	G (High resolution)
	Motor size	A	B	C	LS		
KXL06030-C□-C,F,G	□28	—	—	—	203	223	203
KXL06050-C□-C,F,G					223	243	223
KXL06075-C□-C,F,G					248	268	248

MA With electromagnetic brake

Motor model PKE545MC-A1

Side view

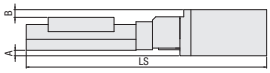

Top view

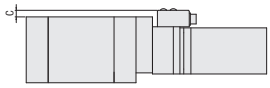

Uncovered

Model	MA (With electromagnetic brake)				C (Standard)
	Motor size	A	B	C	LS
KXL06030-N□-MA	□42	5	7	6	245 / 198
KXL06050-N□-MA					265 / 218
KXL06075-N□-MA					290 / 243

Covered

Model	MA (With electromagnetic brake)				C (Standard)
	Motor size	A	B	C	LS
KXL06030-C□-MA	□42	5	4	6	250 / 203
KXL06050-C□-MA					270 / 223
KXL06075-C□-MA					295 / 248

PA α step

Motor model ARM24SAK

Side view

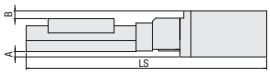

Top view

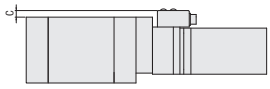

Uncovered

Model	PA (α step)				C (Standard)
	Motor size	A	B	C	LS
KXL06030-N□-PA	□28	—	0.5	6	211 / 198
KXL06050-N□-PA					231 / 218
KXL06075-N□-PA					256 / 243

Covered

Model	PA (α step)				C (Standard)
	Motor size	A	B	C	LS
KXL06030-C□-PA	□28	—	—	6	216 / 203
KXL06050-C□-PA					236 / 223
KXL06075-C□-PA					261 / 248

UA AC servo motor

Motor model HG-KR053

Side view

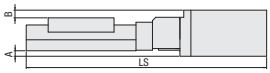

Top view

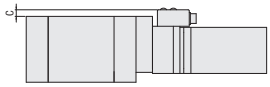

Uncovered

Model	UA (AC servo motor)				C (Standard)
	Motor size	A	B	C	LS
KXL06030-N□-UA	□40	4.7	6.5	6	240.4 / 198
KXL06050-N□-UA					260.4 / 218
KXL06075-N□-UA					285.4 / 243

Covered

Model	UA (AC servo motor)				C (Standard)
	Motor size	A	B	C	LS
KXL06030-C□-UA	□40	4.7	3.5	6	245.4 / 203
KXL06050-C□-UA					265.4 / 223
KXL06075-C□-UA					290.4 / 248

CAVE-X POSITIONER

X-axis Linear Ball Guide: KXL06100/KXL06150

KXL06100-N

KXL06150-N

KXL06100-C

KXL06150-C

Freely customize the motor

RoHS

See page P.009

Model | Selection code | Option code

KXL06 100-N2-F □ □

1 2 3 4 5 6

Cable P.1-207～
Electrical specification P.1-077～

1 Travel length

100	100mm
150	150mm

2 Cover type

N	Uncovered	
C	Covered	

3 Ball screw lead selection

2	Lead 2mm

4 Motor option

Code	Specification
F	High-torque
G	High resolution
MA	With electromagnetic brake (Driver set)
PA	α Step (Driver set)
UA	Servo motor (Amplifier set)

* Code MA · PA · UA is the set of driver and cable.
* See page P.1-077~ for details of motor option.

5 Origin sensor option

Code	Specification
Blank	None
1	CCW right side
2	CCW left side
3	Center right side
4	Center left side
5	CW right side
6	CW left side

* See page P.1-079~ for details of origin sensor option.

■ Position of origin sensor option(Please choose one position)

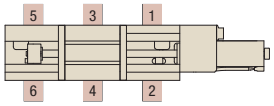

6 Cable option

Code	Specification	Cable type
A	2m	D214-2-2E
B	2m One end loose	D214-2-2EK
C	4m	D214-2-4E
D	4m One end loose	D214-2-4EK
E	Only connector	—
F	Robot cable 2m	D214-2-2R
G	Robot cable 2m one end loose	D214-2-2RK
H	Robot cable 4m	D214-2-4R
J	Robot cable 4m one end loose	D214-2-4RK
M	Cable for electromagnetic brake	—
P	Cable for α step	
U	Cable for servo motor	
Blank	Without cable	—

* One end loose position to only stage opposite side.
* The price includes M, P and U.
  Not available non-cable.
* See page P.1-207,209~ for details of cable.
* Please select "Code A, C, F or H" when connect with stepping motor controller(DS102/112).

[Note]
Please check available cable from compatibility list.
Not included cable for a main body. Please choose the code as below.

	Motor code	Cable code
Motor/cable products list	F,G	Blank, A～H,J
	MA	M
	PA	P
	UA	U

SPEC

Model	Uncovered		KXL06100-N2-F	KXL06150-N2-F
	Covered		KXL06100-C2-F	KXL06150-C2-F
Mechanical specification	Travel length		100mm	150mm
	Table size		60×60mm	
	Feed screw (Ball screw)		φ8 lead 2	
	Guide		Linear ball guide	
	Main materials-Finishing		Stainless–Opposite side of the end face finishing	
	Weight	Uncovered	1.80kg	2.10kg
		Covered	1.86kg	2.16kg
Accuracy specification	Resolution (Pulse)	Full/Half	4μm/2μm	
		Microstep	0.2μm (1/20 on resolution)	
	MAX speed		45mm/sec	
	Uni-directional positioning accuracy		Within 10μm	Within 15μm
	Repeatability positioning accuracy		Within ±0.5μm	
	Load capacity		12kgf [117.6N]	
	Moment stiffness		Pitch 0.05/yaw 0.05/roll 0.05 [″/N・cm]	
	Lost motion		Within 1μm	
	Backlash		1Within μm	
	Straightness		Within 5μm	
	Parallelism		Within 15μm	
	Motion parallelism		Within 10μm	Within 15μm
	Pitching/Yawing		Within 25″/Within 20″	
Sensor	Limit sensor		Installed	
	Origin sensor		— *Attachable in origin sensor option	
	Slit origin sensor		—	
Provided screw (Hexagon-headed bolt)			8 of M4—14	14 of M4—14

* Might be changed specification due to motors. See page P.1-213~ for details.

Motor option

F High-torque
Motor model
PK525HPB-C1

G High resolution
Motor model
PK523HPMB-C1

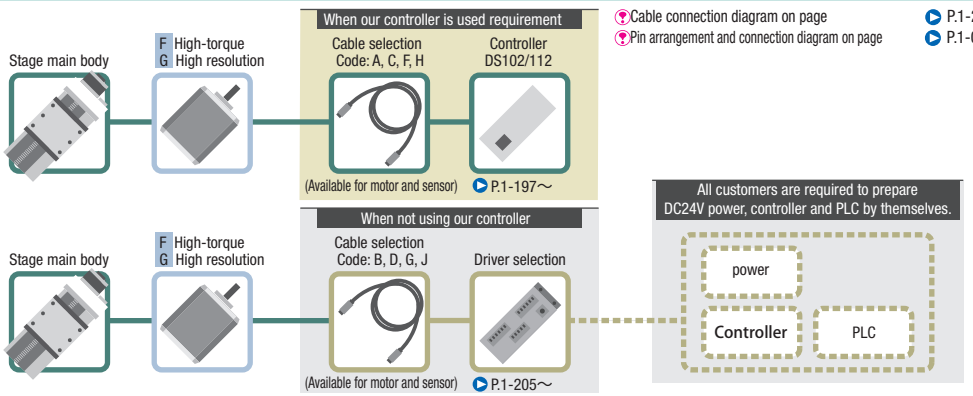

Cable connection diagram on page P.1-209~
Pin arrangement and connection diagram on page P.1-078~

Motor option

MA With electromagnetic brake
Motor model
PKE545MC-A1

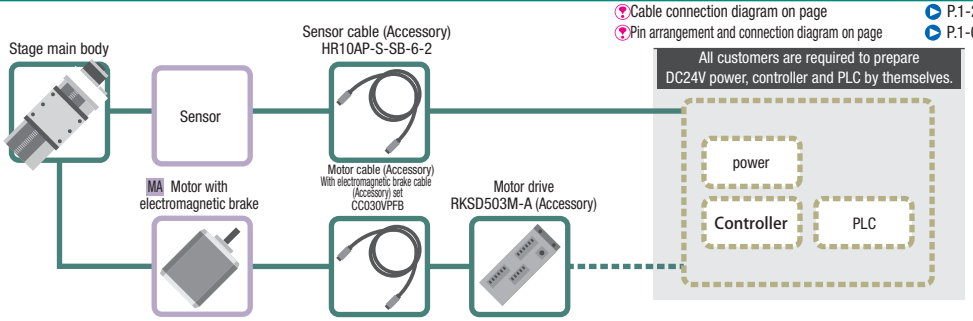

Cable connection diagram on page P.1-209~
Pin arrangement and connection diagram on page P.1-078~

Motor option

PA α Step
Motor model
ARM24SAK

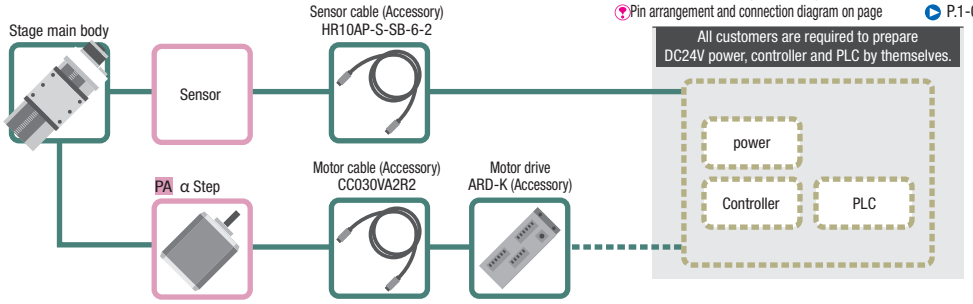

Cable connection diagram on page P.1-209~
Pin arrangement and connection diagram on page P.1-078~

Motor option

UA AC servo motor
Motor model
HG-KR053

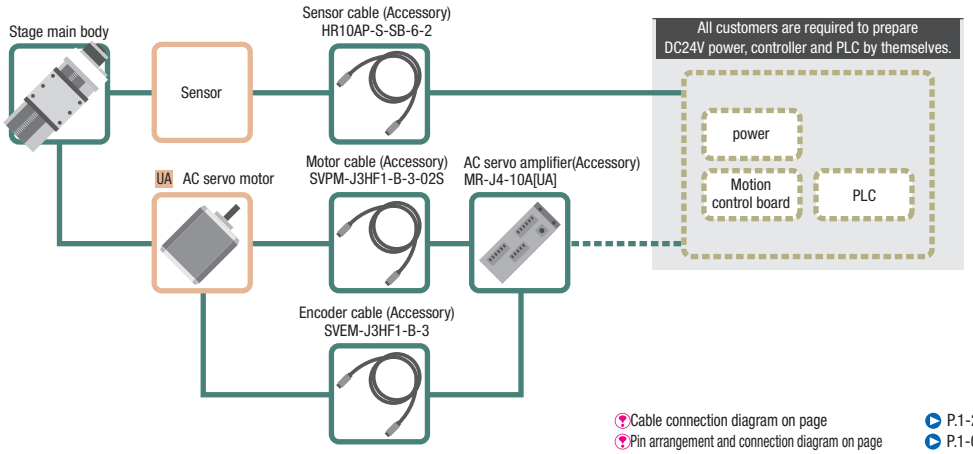

Cable connection diagram on page P.1-209~
Pin arrangement and connection diagram on page P.1-078~

Motor code			F	G	MA	PA	UA
Feature			High-torque	High resolution	With electromagnetic brake	Small step-out	High speed
Type			5 phase stepping motor 0.75A/ Phase		5 phase stepping motor 0.35A/phase	α step motor	AC servo motor
Motor model*			**PK525HPB-C1**	**PK523HPMB-C1**	**PKE545MC-A1**	**ARM24SAK**	**HG-KR053**
Resolution	Lead 2mm	Full/Half	4μm/2μm	2μm/1μm	4μm/2μm	2μm (Set to 1000P/R)	22 bits encoder (4194304P/R)
		Micro step (1/20 split)	0.2μm	0.1μm	0.2μm	—	
MAX speed	Lead 2mm		45mm/sec	30mm/sec	40mm/sec	80mm/sec	100mm/sec

* Model is our own management model.

CAVE-X POSITIONER

X-axis Linear Ball Guide: KXL06100/KXL06150

Dimensional outline drawings

KXL06100-N2-F

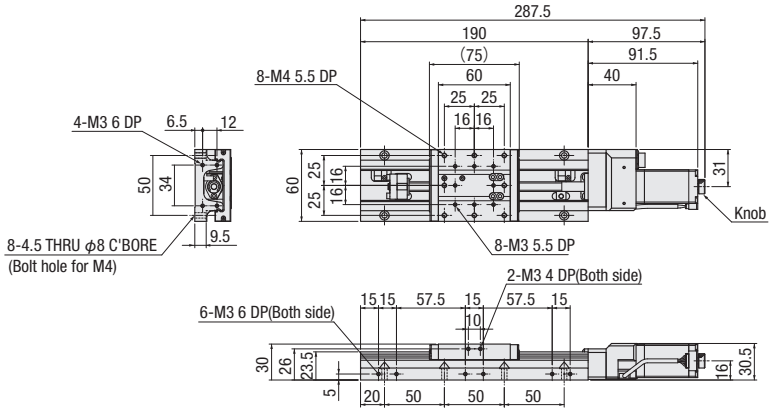

KXL06100-C2-F

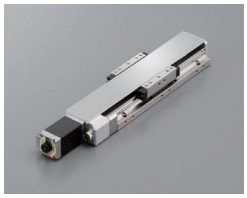

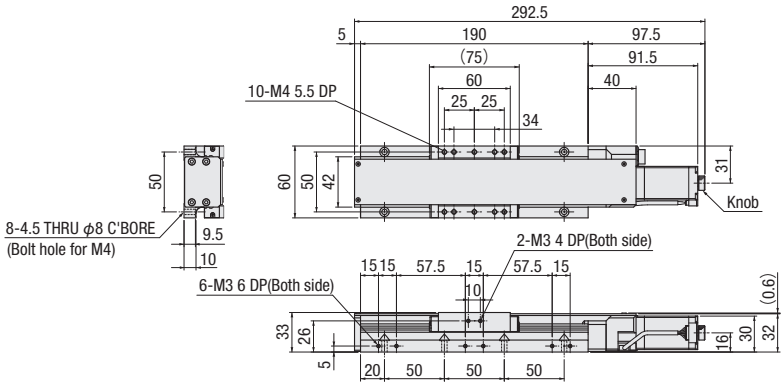

KXL06150-N2-F

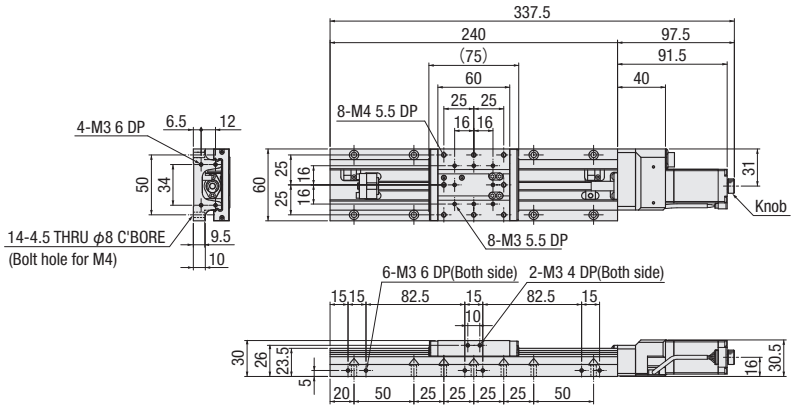

KXL06150-C2-F

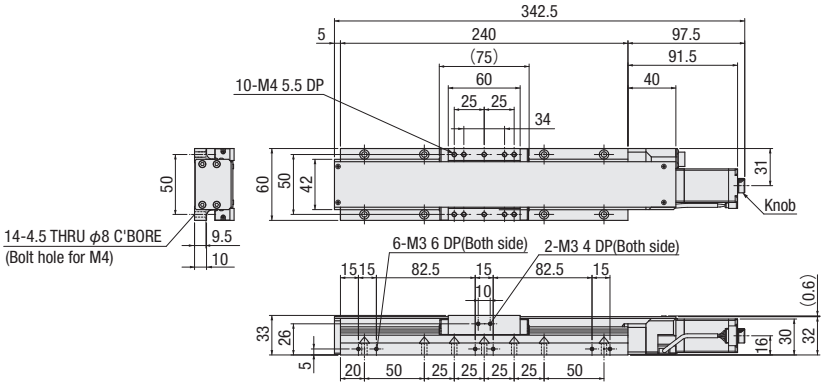

CAD PART COMMUNITY CAD DATA
SURUGA SEIKI CAD 3D·2D

Dimensional outline drawings

F High-torque

Motor model PK525HPB-C1

G High resolution

Motor model PK523HPMB-C1

Side view

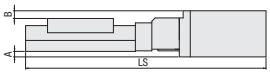

Top view

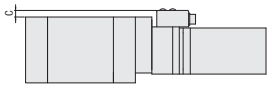

Uncovered

Model	F (High-torque) /G (High resolution) Common				F (High-torque)	G (High resolution)
	Motor size	A	B	C	LS	
KXL06100-N2-F,G	□28	—	0.5	—	288	268
KXL06150-N2-F,G					338	318

Covered

Model	F (High-torque) /G (High resolution) Common				F (High-torque)	G (High resolution)
	Motor size	A	B	C	LS	
KXL06100-C2-F,G	□28	—	—	—	293	273
KXL06150-C2-F,G					343	323

MA With electromagnetic brake

Motor model PKE545MC-A1

Side view

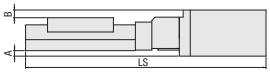

Top view

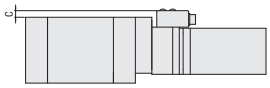

Uncovered

Model	MA (With electromagnetic brake)				F (High-torque)
	Motor size	A	B	C	LS
KXL06100-N2-MA	□42	5	7	6	315 / 288
KXL06150-N2-MA					365 / 338

Covered

Model	MA (With electromagnetic brake)				F (High-torque)
	Motor size	A	B	C	LS
KXL06100-C2-MA	□42	5	4	6	320 / 293
KXL06150-C2-MA					370 / 343

PA α step

Motor model ARM24SAK

Side view

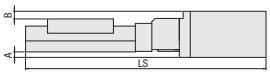

Top view

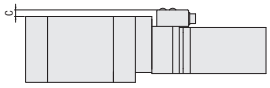

Uncovered

Model	PA (α step)				F (High-torque)
	Motor size	A	B	C	LS
KXL06100-N2-PA	□28	—	0.5	6	281 / 288
KXL06150-N2-PA					331 / 338

Covered

Model	PA (α step)				F (High-torque)
	Motor size	A	B	C	LS
KXL06100-C2-PA	□28	—	—	6	286 / 293
KXL06150-C2-PA					336 / 343

UA AC servo motor

Motor model HG-KR053

Side view

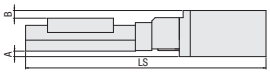

Top view

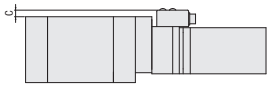

Uncovered

Model	UA (AC servo motor)				F (High-torque)
	Motor size	A	B	C	LS
KXL06100-N2-UA	□40	4.7	6.5	6	310.4 / 288
KXL06150-N2-UA					360.4 / 338

Covered

Model	UA (AC servo motor)				F (High-torque)
	Motor size	A	B	C	LS
KXL06100-C2-UA	□40	4.7	3.5	6	315.4 / 293
KXL06150-C2-UA					365.4 / 343

CAVE-X POSITIONER

X-axis Linear Ball Guide: KXL06200/KXL06300

KXL06200-N

KXL06300-N

KXL06200-C

KXL06300-C

Freely customize the motor

RoHS

See page P.009

Model | Selection code | Option code

KXL06 200-N2-F □ □

1 2 3 4 5 6

Cable P.1-207～
Electrical specification P.1-077～

1 Travel length

200	200mm
300	300mm

2 Cover type

N	Uncovered	
C	Covered	

3 Ball screw lead selection

2	Lead 2mm

4 Motor option

Code	Specification
F	High-torque
G	High resolution
MA	With electromagnetic brake (Driver set)
PA	α Step (Driver set)
UA	Servo motor (Amplifier set)

* Code MA · PA · UA is the set of driver and cable.
* See page P.1-077~ for details of motor option.

5 Origin sensor option

Code	Specification
Blank	None
1	CCW right side
2	CCW left side
3	Center right side
4	Center left side
5	CW right side
6	CW left side

* See page P.1-079~ for details of origin sensor option.

■Position of origin sensor option (Please choose one position)

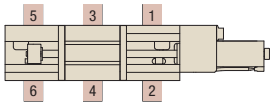

6 Cable option

Code	Specification	Cable type
A	2m	D214-2-2E
B	2m One end loose	D214-2-2EK
C	4m	D214-2-4E
D	4m One end loose	D214-2-4EK
E	Only connector	—
F	Robot cable 2m	D214-2-2R
G	Robot cable 2m one end loose	D214-2-2RK
H	Robot cable 4m	D214-2-4R
J	Robot cable 4m one end loose	D214-2-4RK
M	Cable for electromagnetic brake	—
P	Cable for α step	
U	Cable for servo motor	
Blank	Cable is not included (Standard)	—

* One end loose position to only stage opposite side.
* The price includes M, P and U.
  Not available non-cable.
* See page P.1-207,209~ for details of cable.
* Please select "Code A, C, F or H" when connect with stepping motor controller(DS102/112).

[Note]
Please check available cable from compatibility list.
Not included cable for a main body. Please choose the code as below.

	Motor code	Cable code
Motor/cable products list	F,G	Blank, A～H,J
	MA	M
	PA	P
	UA	U

SPEC

Model	Uncovered		KXL06200-N2-F	KXL06300-N2-F
	Covered		KXL06200-C2-F	KXL06300-C2-F
Mechanical specification	Travel length		200mm	300mm
	Table size		60×60mm	
	Feed screw (Ball screw)		φ8 lead 2	
	Guide		Linear ball guide	
	Main materials-Finishing		Stainless–Opposite side of the end face finishing	
	Weight	Uncovered	2.42kg	3.02kg
		Covered	2.48kg	3.12kg
Accuracy specification	Resolution (Pulse)	Full/Half	4μm/2μm	
		Microstep	0.2μm (1/20 on resolution)	
	MAX speed		45mm/sec	
	Uni-directional positioning accuracy		Within 15μm	Within 25μm
	Repeatability positioning accuracy		Within ±0.5μm	
	Load capacity		12kgf [11 7.6N]	
	Moment stiffness		Pitch 0.05/yaw 0.05/roll 0.05 [″/N・cm]	
	Lost motion		Within 1μm	
	Backlash		Within 1μm	
	Straightness		Within 7μm	
	Parallelism		Within 15μm	
	Motion parallelism		Within 20μm	Within 25μm
	Pitching/Yawing		Within 30″/Within 20″	Within 35″/Within 20″
Sensor	Limit sensor		Installed	
	Origin sensor		– *Attachable in origin sensor option	
	Slit origin sensor		–	
Provided screw (Hexagon-headed bolt)			12 of M4—14	16 of M4—14

* Might be changed specification due to motors. See page P.1-213~ for details.

Motor option

F High-torque
Motor model
PK525HPB-C1

G High resolution
Motor model
PK523HPMB-C1

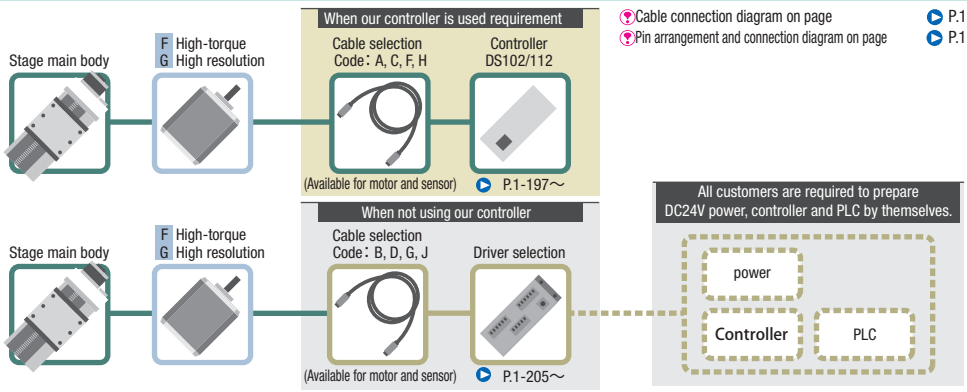

Cable connection diagram on page P.1-209~
Pin arrangement and connection diagram on page P.1-078~

Motor option

MA With electromagnetic brake
Motor model
PKE545MC-A1

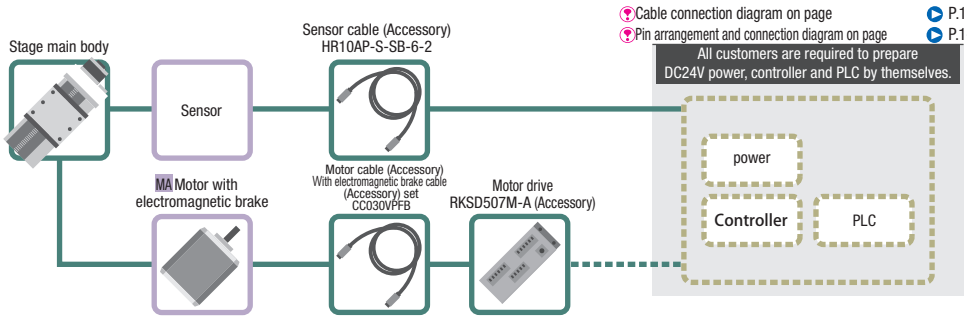

Cable connection diagram on page P.1-209~
Pin arrangement and connection diagram on page P.1-078~

Motor option

PA α Step
Motor model
ARM24SAK

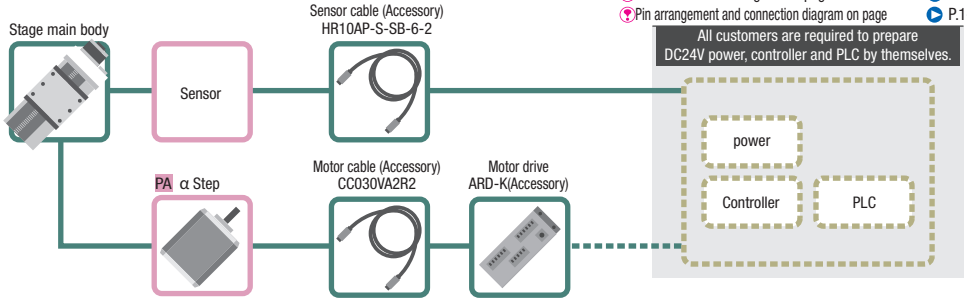

Cable connection diagram on page P.1-209~
Pin arrangement and connection diagram on page P.1-078~

Motor option

UA AC servo motor
Motor model
HG-KR053

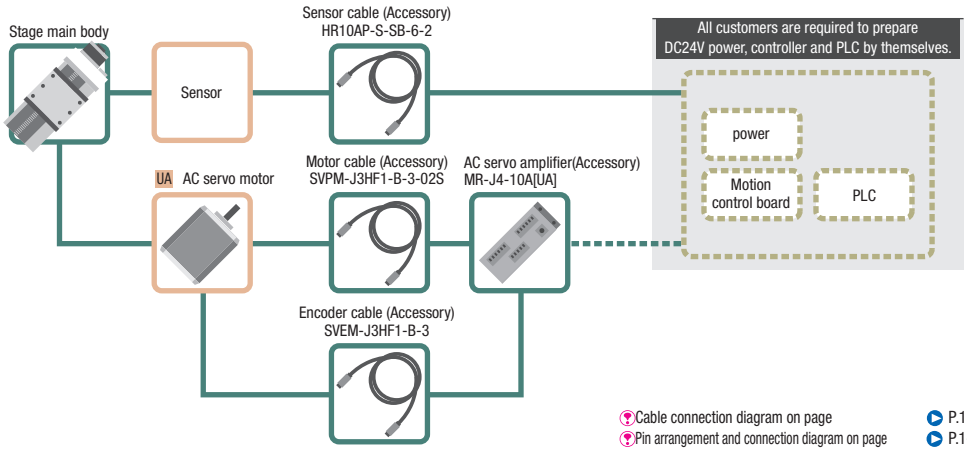

Cable connection diagram on page P.1-209~
Pin arrangement and connection diagram on page P.1-078~

Motor code			F	G	MA	PA	UA
Feature			High-torque	High resolution	With electromagnetic brake	Small step-out	High speed
Type			5 phase stepping motor 0.75A/Phase		5 phase stepping motor 0.35A/phase	α step motor	AC servo motor
Motor model*			**PK525HPB-C1**	**PK523HPMB-C1**	**PKE545MC-A1**	**ARM24SAK**	**HG-KR053**
Resolution	Lead 2mm	Full/Half	4μm/2μm	2μm/1μm	4μm/2μm	2μm (1000P/R setting)	22 bits encoder (4194304P/R)
		Micro step (1/20 split)	0.2μm	0.1μm	0.2μm	—	
MAX speed	Lead 2mm		45mm/sec	30mm/sec	40mm/sec	80mm/sec	100mm/sec

*Model is our own management model.

CAVE-X POSITIONER

X-axis Linear Ball Guide: KXL06200/KXL06300

Dimensional outline drawings

KXL06200-N2-F

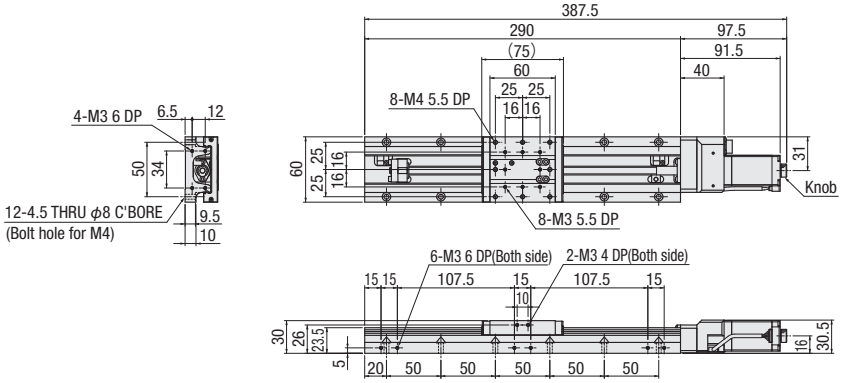

KXL06200-C2-F

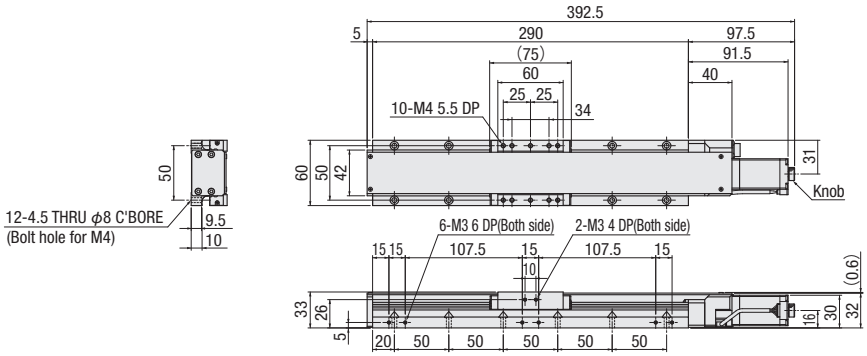

KXL06300-N2-F

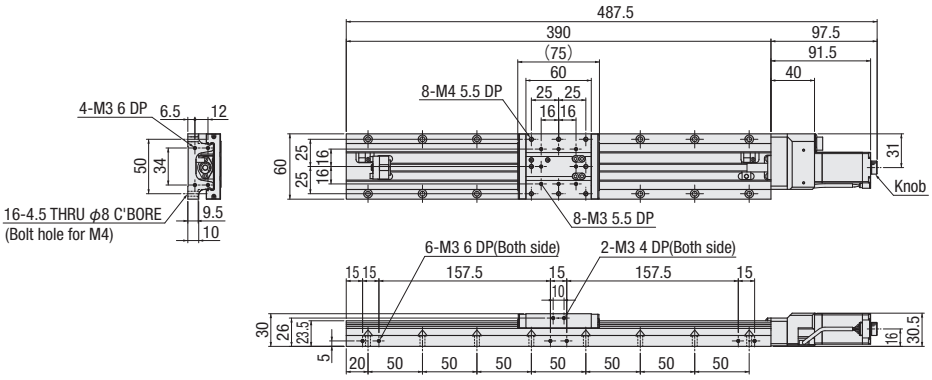

KXL06300-C2-F

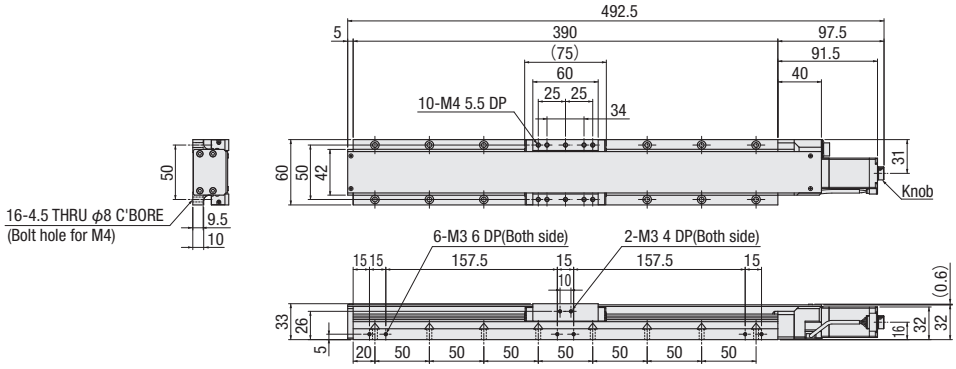

PART COMMUNITY CAD DATA
SURUGA SEIKI CAD 3D·2D

Dimensional outline drawings

F High-torque

Motor model PK525HPB-C1

G High resolution

Motor model PK523HPMB-C1

Side view

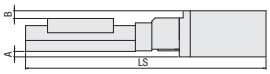

Top view

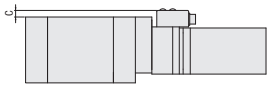

Uncovered

Model	F (High-torque) /G (High resolution) Common				F (High-torque)	G (High resolution)
	Motor size	A	B	C	LS	
KXL06200-N2-F,G	□28	—	0.5	—	388	368
KXL06300-N2-F,G					488	468

Covered

Model	F (High-torque) /G (High resolution) Common				F (High-torque)	G (High resolution)
	Motor size	A	B	C	LS	
KXL06200-C2-F,G	□28	—	—	—	393	373
KXL06300-C2-F,G					493	473

MA With electromagnetic brake

Motor model PKE545MC-A1

Side view

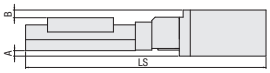

Top view

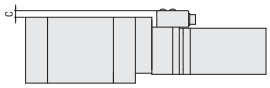

Uncovered

Model	MA (With electromagnetic brake)				F (High-torque)
	Motor size	A	B	C	LS
KXL06200-N2-MA	□42	5	7	6	415 / 388
KXL06300-N2-MA					515 / 488

Covered

Model	MA (With electromagnetic brake)				F (High-torque)
	Motor size	A	B	C	LS
KXL06200-C2-MA	□42	5	4	6	420 / 393
KXL06300-C2-MA					520 / 493

PA α step

Motor model ARM24SAK

Side view

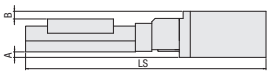

Top view

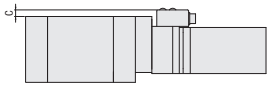

Uncovered

Model	PA (α step)				F (High-torque)
	Motor size	A	B	C	LS
KXL06200-N2-PA	□28	—	0.5	6	381 / 388
KXL06300-N2-PA					481 / 488

Covered

Model	PA (α step)				F (High-torque)
	Motor size	A	B	C	LS
KXL06200-C2-PA	□28	—	—	6	386 / 393
KXL06300-C2-PA					486 / 493

UA AC servo motor

Motor model HG-KR053

Side view

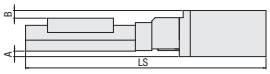

Top view

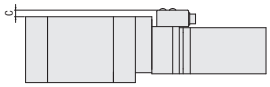

Uncovered

Model	UA (AC servo motor)				F (High-torque)
	Motor size	A	B	C	LS
KXL06200-N2-UA	□40	4.7	6.5	6	410.4 / 388
KXL06300-N2-UA					510.4 / 488

Covered

Model	UA (AC servo motor)				F (High-torque)
	Motor size	A	B	C	LS
KXL06200-C2-UA	□40	4.7	3.5	6	415.4 / 393
KXL06300-C2-UA					515.4 / 493

CAVE-X POSITIONER

XY-axis Linear Ball Guide: KYL06030/KYL06050/KYL06075

RoHS

KYL06030-N

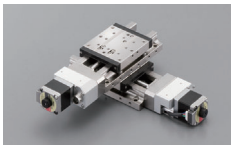

KYL06050-N

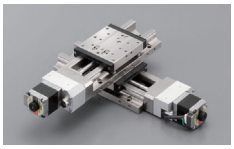

KYL06075-N

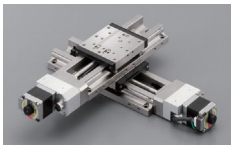

KYL06030-C

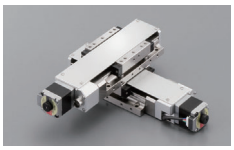

KYL06050-C

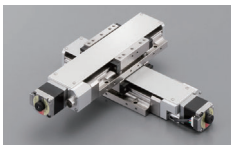

KYL06075-C

Model / Selection code / Option code

KYL06 030-N1-C □ □

1 2 3 4 5 6

Cable P.1-207～
Electrical specification P.1-077～

1 Travel length

030	30mm
050	50mm
075	75mm

2 Cover type

N	Uncovered	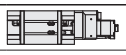
C	Covered	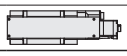

3 Ball screw lead selection

1	Lead 1mm
2	Lead 2mm

4 Motor option

Code	Specification
C	Standard
F	High-torque
G	High resolution
MA	With electromagnetic brake (Driver set)
PA	α Step (Driver set)
UA	Servo motor (Amplifier set)

* Code MA · PA · UA is the set of driver and cable.
* See page P.1-077~ for details of motor option.

5 Origin sensor option

Code	Specification
Blank	None
1	CCW right side
2	CCW left side
3	Center right side
4	Center left side
5	CW right side
6	CW left side

* See page P.1-079~ for details of origin sensor option.

■Position of origin sensor option (Please choose one position)

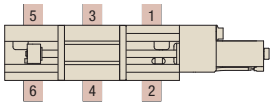

6 Cable option

Code	Specification	Cable type
A	2m	D214-2-2E
B	2m One end loose	D214-2-2EK
C	4m	D214-2-4E
D	4m One end loose	D214-2-4EK
E	Only connector (Cable is not included)	—
F	Robot cable 2m	D214-2-2R
G	Robot cable 2m one end loose	D214-2-2RK
H	Robot cable 4m	D214-2-4R
J	Robot cable 4m one end loose	D214-2-4RK
M	Cable for electromagnetic brake	—
P	Cable for α step	
U	Cable for servo motor	
Blank	Cable is not included (Standard)	—

* One end loose position to only stage opposite side.
* The price includes M, P and U.
  Not available non-cable.
* See page P.1-207,209~ for details of cable.
* Please select "Code A, C, F or H" when connect with stepping motor controller(DS102/112).

[Note]
Please check available cable from compatibility list.
Not included cable for a main body. Please choose the code as below.

	Motor code	Cable code
Motor/cable products list	C,F,G	Blank, A～H,J
	MA	M
	PA	P
	UA	U

SPEC

Model		Uncovered	KYL06030-N1-C	KYL06030-N2-C	KYL06050-N1-C	KYL06050-N2-C	KYL06075-N1-C	KYL06075-N2-C
		Covered	KYL06030-C1-C	KYL06030-C2-C	KYL06050-C1-C	KYL06050-C2-C	KYL06075-C1-C	KYL06075-C2-C
Mechanical specification	Travel length		30mm		50mm		75mm	
	Table size		60×60mm					
	Feed screw (Ball screw)		φ8 lead 1	φ8 lead 2	φ8 lead 1	φ8 lead 2	φ8 lead 1	φ8 lead 2
	Guide		Linear ball guide					
	Main materials-Finishing		Stainless–Opposite side of the end face finishing					
	Weight	Uncovered	2.56kg		2.8kg		3.08kg	
		Covered	2.68kg		2.88kg		3.32kg	
Accuracy specification	Resolution (Pulse)	Full/Half	2μm/1μm	4μm/2μm	2μm/1μm	4μm/2μm	2μm/1μm	4μm/2μm
		Microstep	0.1μm (1/20 on resolution)	0.2μm (1/20 on resolution)	0.1μm (1/20 on resolution)	0.2μm (1/20 on resolution)	0.1μm (1/20 on resolution)	0.2μm (1/20 on resolution)
	MAX speed		30mm/sec	35mm/sec	30mm/sec	35mm/sec	30mm/sec	35mm/sec
	Load capacity		10kgf [98N]					
	Perpendicularity		Within 15μm/Full stroke		Within 25μm/Full stroke		Within 37.5μm/Full stroke	
Sensor	Limit sensor		Installed					
	Origin sensor		— *Attachable in origin sensor option					
	Slit origin sensor		—					
Provided screw (Hexagon-headed bolt)			8 of M4—14					

Single axis accuracy specification	Uni-directional positioning accuracy	Within 5μm	Within 7μm
	Repeatability positioning accuracy	Within ±0.5μm	
	Lost motion	Within 1μm	
	Backlash	Within 1μm	
	Straightness	Within 3μm	
	Pitching/Yawing	Within 20″/Within 15″	

* Might be changed specification due to motors. See page P.1-213~ for details.

PART COMMUNITY CAD DATA SURUGA SEIKI CAD 3D·2D

Dimensional outline drawings

KYL06030-N1-C (KYL06030-N2-C)

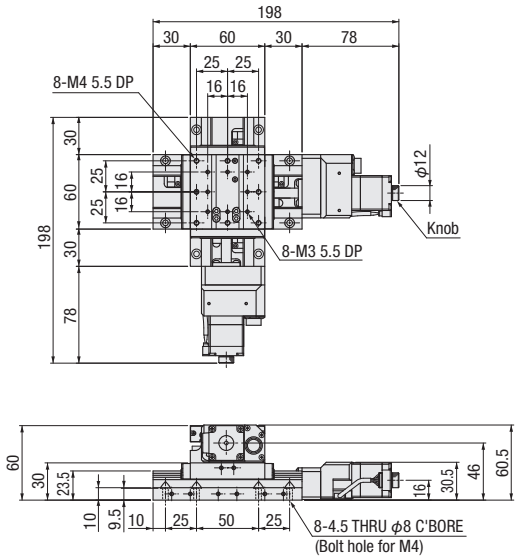

KYL06030-C1-C (KYL06030-C2-C)

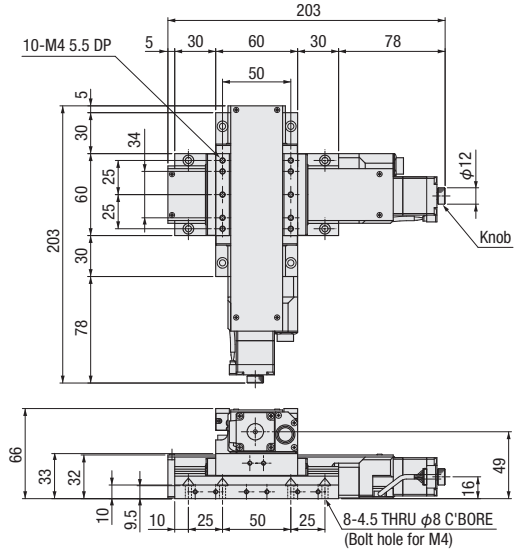

KYL06050-N1-C (KYL06050-N2-C)

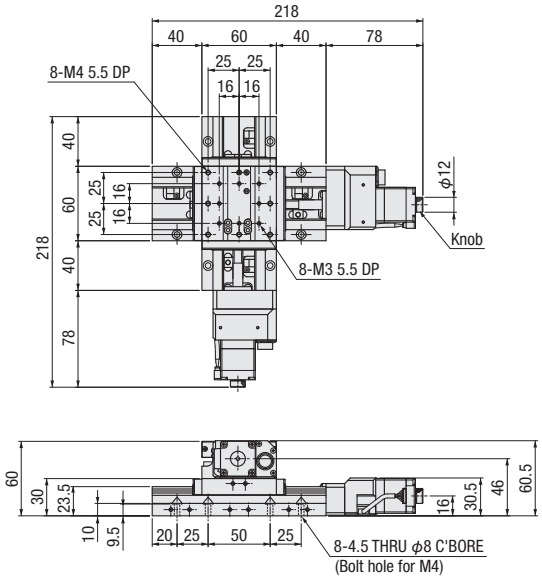

KYL06050-C1-C (KYL06050-C2-C)

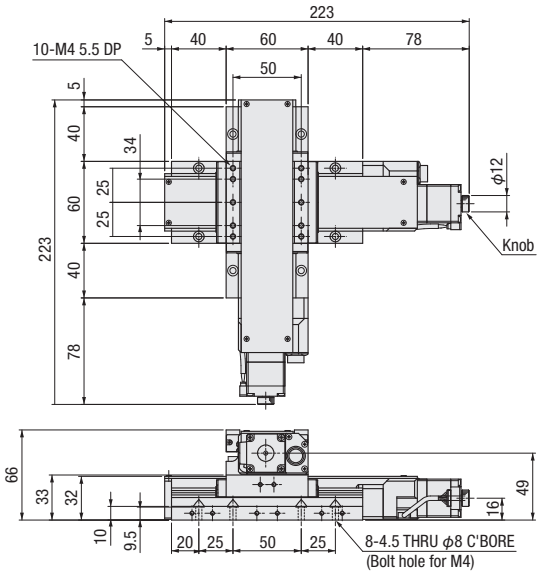

KYL06075-N1-C (KYL06075-N2-C)

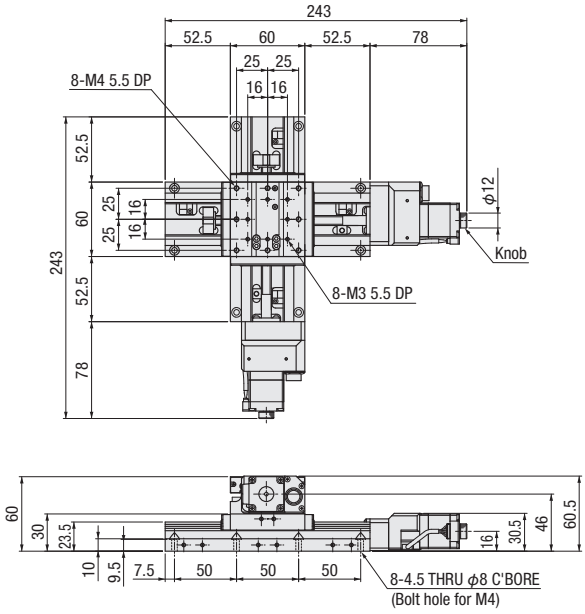

KYL06075-C1-C (KYL06075-C2-C)

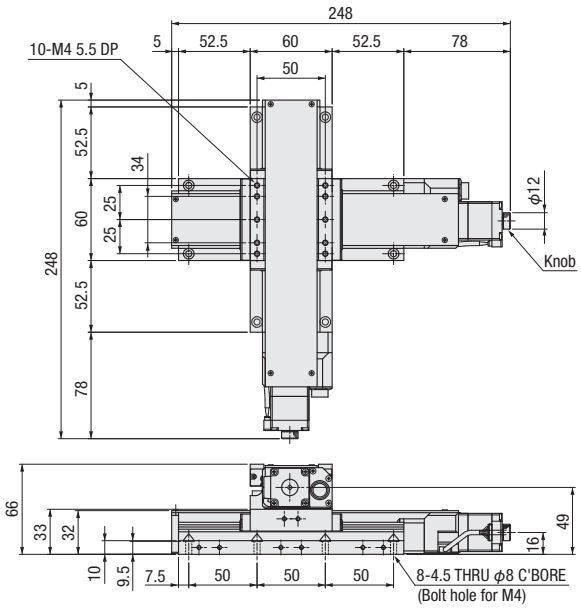

CAVE-X POSITIONER

XY-axis Linear Ball Guide: KYL06100/KYL06150

KYL06100-N

KYL06150-N

KYL06100-C

KYL06150-C

RoHS

Model | Selection code | Option code

KYL06 100-N2-F□□

1 2 3 4 5 6

Cable P.1-207～
Electrical specification P.1-077～

1 Travel length

100	100mm
150	150mm

2 Cover type

N	Uncovered	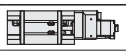
C	Covered	

3 Ball screw lead selection

2	Lead 2mm

4 Motor option

Code	Specification
F	High-torque
G	High resolution
MA	With electromagnetic brake (Driver set)
PA	α Step (Driver set)
UA	Servo motor (Amplifier set)

* Code MA · PA · UA is the set of driver and cable.
* See page P.1-077~ for details of motor option.

5 Origin sensor option

Code	Specification
Blank	None
1	CCW right side
2	CCW left side
3	Center right side
4	Center left side
5	CW right side
6	CW left side

* See page P.1-079~ for details of origin sensor option.

■ Position of origin sensor option (Please choose one position)

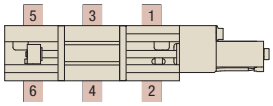

6 Cable option

Code	Specification	Cable type
A	2m	D214-2-2E
B	2m One end loose	D214-2-2EK
C	4m	D214-2-4E
D	4m One end loose	D214-2-4EK
E	Only connector (Cable is not included)	—
F	Robot cable 2m	D214-2-2R
G	Robot cable 2m one end loose	D214-2-2RK
H	Robot cable 4m	D214-2-4R
J	Robot cable 4m one end loose	D214-2-4RK
M	Cable for electromagnetic brake	—
P	Cable for α step	
U	Cable for servo motor	
Blank	Cable is not included (Standard)	—

* One end loose position to only stage opposite side.
* The price includes M, P and U.
  Not available non-cable.
* See page P.1-207,209~ for details of cable.
* Please select "Code A, C, F or H" when connect with stepping motor controller(DS102/112).

[Note]
Please check available cable from compatibility list.
Not included cable for a main body. Please choose the code as below.

	Motor code	Cable code
Motor/cable products list	F,G	Blank, A～H,J
	MA	M
	PA	P
	UA	U

SPEC

Model		Uncovered	KYL06100-N2-F	KYL06150-N2-F
		Covered	KYL06100-C2-F	KYL06150-C2-F
Mechanical specification	Travel length		100mm	150mm
	Table size		60×60mm	
	Feed screw (Ball screw)		ϕ8 lead 2	
	Guide		Linear ball guide	
	Main materials-Finishing		Stainless–Opposite sid.e of the end face finishing	
	Weight	Uncovered	3.6kg	4.2kg
		Covered	3.72kg	4.32kg
Accuracy specification	Resolution (Pulse)	Full/Half	4μm/2μm	
		Microstep	0.2μm (1/20 on resolution)	
	MAX speed		45mm/sec	
	Load capacity		10kgf [98N]	
	Perpendicularity		Within 50μm/Full stroke	Within 75μm/Full stroke
Sensor	Limit sensor		Installed	
	Origin sensor		— *Attachable in origin sensor option	
	Slit origin sensor		—	
Provided screw (Hexagon-headed bolt)			8 of M4—14	14 of M4—14

Single axis accuracy specification	Uni-directional positioning accuracy	Within 10μm	Within 15μm
	Repeatability positioning accuracy	Within ±0.5μm	
	Lost motion	Within 1μm	
	Backlash	Within 1μm	
	Straightness	Within 5μm	
	Pitching/Yawing	Within 25″/Within 20″	

* Might be changed specification due to motors. See page P.1-213~ for details.

Dimensional outline drawings

CAD DATA CAD 3D·2D

KYL06100-N2-F

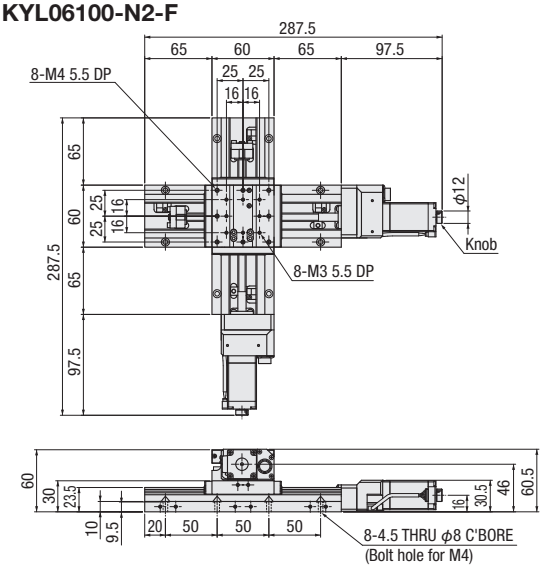

KYL06100-C2-F

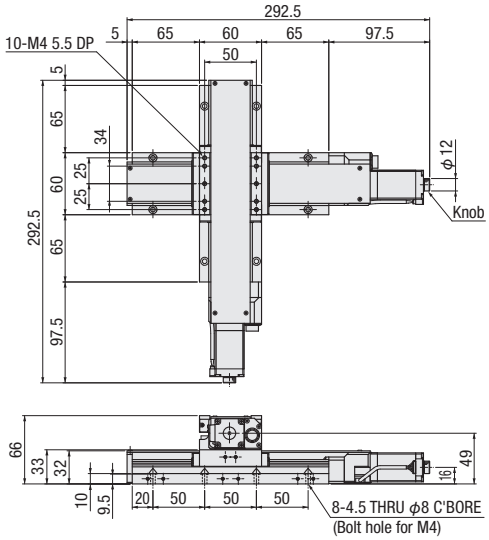

KYL06150-N2-F

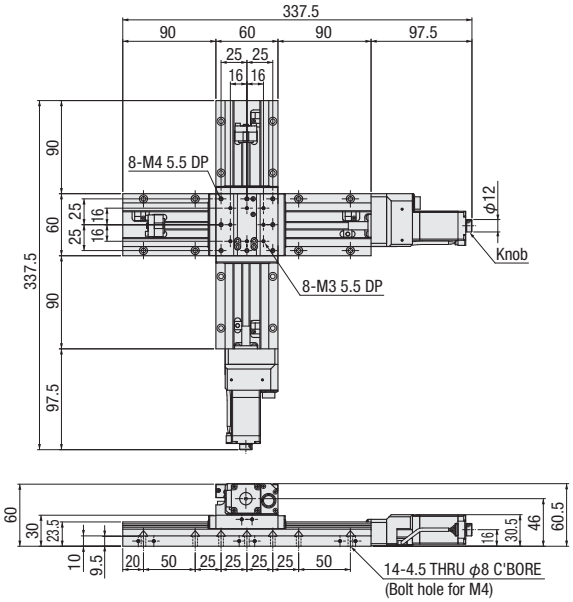

KYL06150-C2-F

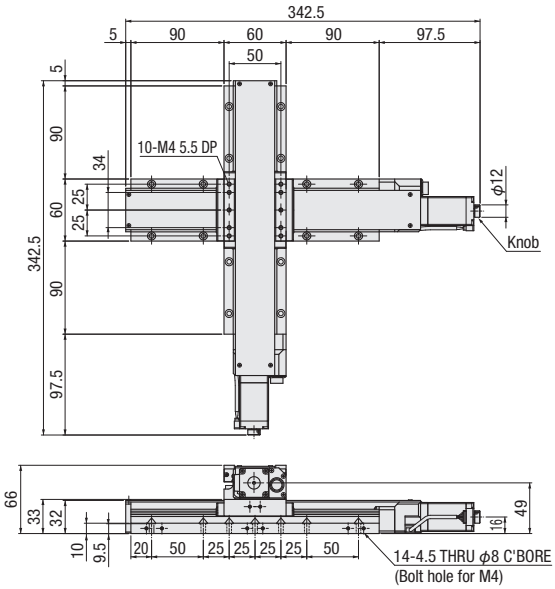

CAVE-X POSITIONER

XY-axis Linear Ball Guide: KYL06200/KYL06300

KYL06200-N

KYL06300-N

KYL06200-C

KYL06300-C

RoHS

Model / Selection code / Option code

KYL06 200-N2-F □ □

1 2 3 4 5 6

Cable P.1-207～
Electrical specification P.1-077～

1 Travel length

200	200mm
300	300mm

2 Cover type

N	Uncovered	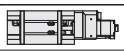
C	Covered	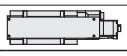

3 Ball screw lead selection

2	Lead 2mm

4 Motor option

Code	Specification
F	High-torque
G	High resolution
MA	With electromagnetic brake (Driver set)
PA	α Step (Driver set)
UA	Servo motor (Amplifier set)

* Code MA · PA · UA is the set of driver and cable.
* See page P.1-077~ for details of motor option.

5 Origin sensor option

Code	Specification
Blank	None
1	CCW right side
2	CCW left side
3	Center right side
4	Center left side
5	CW right side
6	CW left side

* See page P.1-079~ for details of origin sensor option.

■ Position of origin sensor option (Please choose one position)

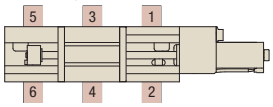

6 Cable option

Code	Specification	Cable type
A	2m	D214-2-2E
B	2m One end loose	D214-2-2EK
C	4m	D214-2-4E
D	4m One end loose	D214-2-4EK
E	Only connector (Cable is not included)	—
F	Robot cable 2m	D214-2-2R
G	Robot cable 2m one end loose	D214-2-2RK
H	Robot cable 4m	D214-2-4R
J	Robot cable 4m one end loose	D214-2-4RK
M	Cable for electromagnetic brake	—
P	Cable for α step	
U	Cable for servo motor	
Blank	Cable is not included (Standard)	—

* One end loose position to only stage opposite side.
* The price includes M, P and U.
  Not available non-cable.
* See page P.1-207,209~ for details of cable.
* Please select "Code A, C, F or H" when connect with stepping motor controller(DS102/112).

[Note]
Please check available cable from compatibility list.
Not included cable for a main body. Please choose the code as below.

	Motor code	Cable code
Motor/cable products list	F,G	Blank, A～H,J
	MA	M
	PA	P
	UA	U

SPEC

Model		Uncovered	KYL06200-N2-F	KYL06300-N2-F
		Covered	KYL06200-C2-F	KYL06300-C2-F
Mechanical specification	Travel length		200mm	300mm
	Table size		60×60mm	
	Feed screw (Ball screw)		φ8 lead 2	
	Guide		Linear ball guide	
	Main materials-Finishing		Stainless–Opposite side of the end face finishing	
	Weight	Uncovered	4.84kg	6.04kg
		Covered	4.96kg	6.24kg
Accuracy specification	Resolution (Pulse)	Full/Half	4μm/2μm	
		Microstep	0.2μm (1/20 on resolution)	
	MAX speed		45mm/sec	
	Load capacity		10kgf [98N]	
	Perpendicularity		Within 100μm/Full stroke	Within 150μm/Full stroke
Sensor	Limit sensor		Installed	
	Origin sensor		– *Attachable in origin sensor option	
	Slit origin sensor		–	
Provided screw (Hexagon-headed bolt)			12 of M4—14	16 of M4—14

Single axis accuracy specification	Uni-directional positioning accuracy	Within 15μm	Within 25μm
	Repeatability positioning accuracy	Within ±0.5μm	
	Lost motion	Within 1μm	
	Backlash	Within 1μm	
	Straightness	Within 7μm	
	Pitching/Yawing	Within 30″/Within 20″	Within 35″/Within 20″

* Might be changed specification due to motors. See page P.1-213~ for details.

Dimensional outline drawings

CAD DATA CAD 3D·2D

KYL06200-N2-F

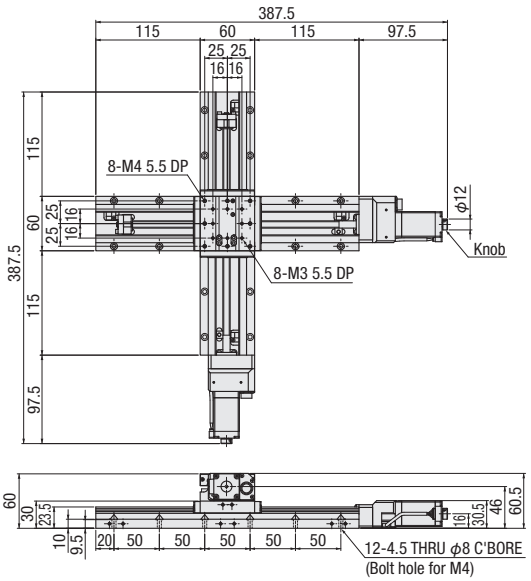

KYL06200-C2-F

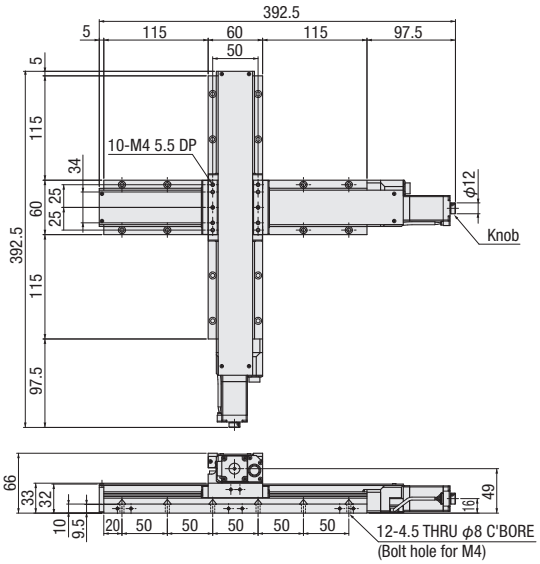

KYL06300-N2-F

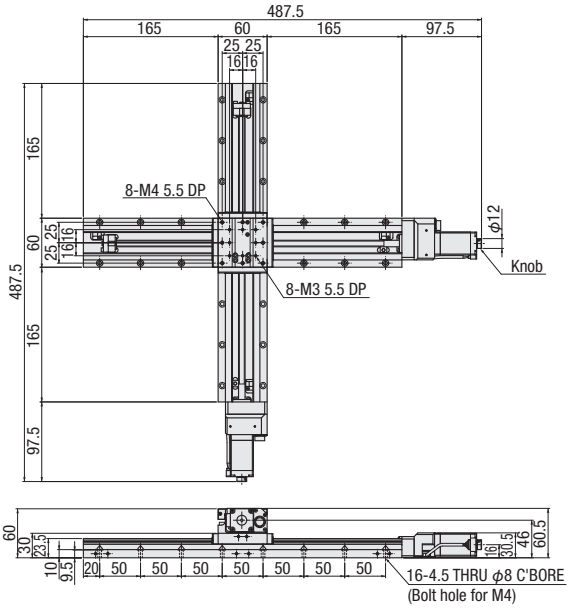

KYL06300-C2-F

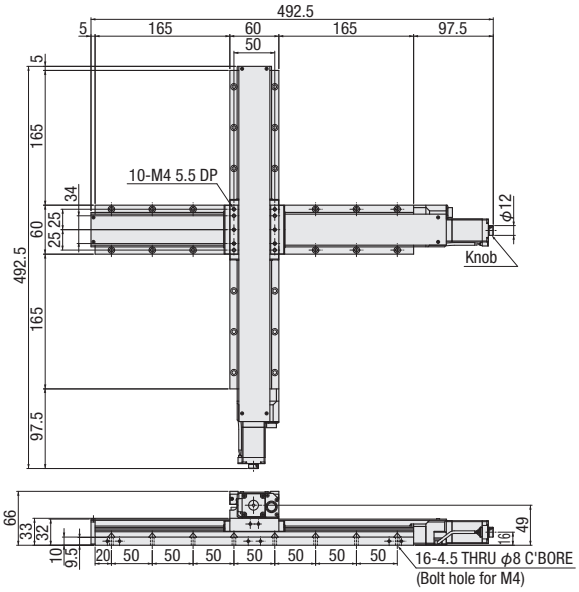

Support guide option

We have a support guide option for 200mm and 300mm.
You can use safely in overhang.

How to order

For Uncovered model
APW6016A-390A

For covered model
APW6019A-390A

Notes:
- Combination with slideguide, adaptor plate or CAVE-X POSITIONER should be selected customer side.

※It is recommended to adjust in parallelism under 10μ m and within 100mm.
- Slide guide materials: Stainless.
  Adaptor plate materials: Aluminum.
- Grease: Multemp PS2.
- If you have any questions, feel free to contact us.

[Dimensions] Slide guide model: SSEBW14-390(MISUMI)

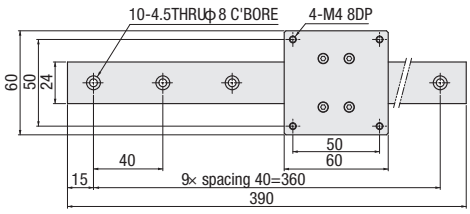

- **For Uncovered model APW6016A-390A**

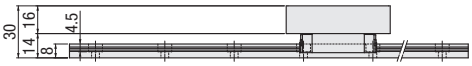

- **For covered model APW6019A-390A**

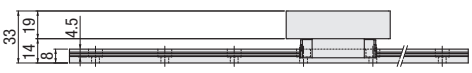

CAVE-X POSITIONER

Z-axis Linear Ball Guide: KZL06030/KZL06050/KZL06075

KZL06030-N/KZL06050-N/KZL06075-N

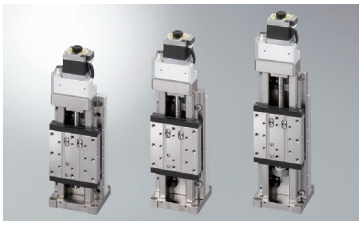

KZL06030-C/KZL06050-C/KZL06075-C

RoHS

Model / Selection code / Option code

KZL06 030-N1-C□□

1 2 3 4 5 6

Cable P.1-207～
Electrical specification P.1-077～

1 Travel length

030	30mm
050	50mm
075	75mm

2 Cover type

N	Uncovered	
C	Covered	

3 Ball screw lead selection

1	Lead 1mm

4 Motor option

Code	Specification
C	Standard
F	High-torque
G	High resolution
MA	With electromagnetic brake (Driver set)
PA	α Step (Driver set)
UA	Servo motor (Amplifier set)

* Code MA · PA · UA is the set of driver and cable.
* See page P.1-077~ for details of motor option.

5 Origin sensor option

Code	Specification
Blank	None
1	CCW right side
2	CCW left side
3	Center right side
4	Center left side
5	CW right side
6	CW left side

* See page P.1-079~ for details of origin sensor option.

■Position of origin sensor option (Please choose one position)

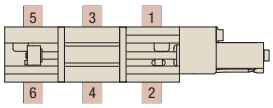

6 Cable option

Code	Specification	Cable type
A	2m	D214-2-2E
B	2m One end loose	D214-2-2EK
C	4m	D214-2-4E
D	4m One end loose	D214-2-4EK
E	Only connector (Cable is not included)	—
F	Robot cable 2m	D214-2-2R
G	Robot cable 2m one end loose	D214-2-2RK
H	Robot cable 4m	D214-2-4R
J	Robot cable 4m one end loose	D214-2-4RK
M	Cable for electromagnetic brake	—
P	Cable for α step	
U	Cable for servo motor	
Blank	Cable is not included (Standard)	—

* One end loose position to only stage opposite side.
* The price includes M, P and U.
  Not available non-cable.
* See page P.1-207,209~ for details of cable.
* Please select "Code A, C, F or H" when connect with stepping motor controller(DS102/112).

[Note]
Please check available cable from compatibility list.
Not included cable for a main body. Please choose the code as below.

	Motor code	Cable code
Motor/cable products list	C,F,G	Blank, A～H,J
	MA	M
	PA	P
	UA	U

SPEC

Model			Uncovered			Covered		
			KZL06030-N1-C	KZL06050-N1-C	KZL06075-N1-C	KZL06030-C1-C	KZL06050-C1-C	KZL06075-C1-C
Mechanical specification	Travel length		30mm	50mm	75mm	30mm	50mm	75mm
	Table size		60×60mm					
	Feed screw (Ball screw)		ϕ8 lead 1					
	Guide		Linear ball guide					
	Main materials-Finishing		Stainless–Opposite side of the end face finishing					
	Weight		2kg	2.12kg	2.26kg	2.06kg	2.16kg	2.32kg
Accuracy specification	Resolution (Pulse)	Full/Half	2μm/1μm					
		Microstep	0.1μm (1/20 on resolution)					
	MAX speed		20mm/sec					
	Load capacity (Excitation)		7kgf [68.6N]					
	Vertical degree		Within 15μm/Full stroke	Within 25μm/Full stroke	Within 37.5μm/Full stroke	Within 15μm/Full stroke	Within 25μm/Full stroke	Within 37.5μm/Full stroke
Sensor	Limit sensor		Installed					
	Origin sensor		— *Attachable in origin sensor option					
	Slit origin sensor		—					
Provided screw (Hexagon-headed bolt)			4 of M4—10					

Single axis accuracy specification	Uni-directional positioning accuracy	Within 5μm	Within 7μm	Within 5μm	Within 7μm
	Repeatability positioning accuracy	Within ±0.5μm			
	Lost motion	Within 1μm			
	Backlash	Within 1μm			
	Straightness	Within 3μm			
	Pitching/Yawing	Within 20″/Within 15″			

* Might be changed specification due to motors. See page P.1-213~ for details.

PART COMMUNITY CAD DATA SURUGA SEIKI CAD 3D·2D

Dimensional outline drawings

KZL06030-N1-C

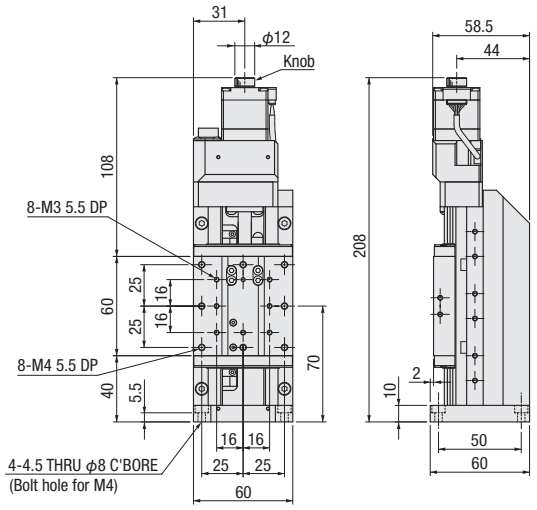

KZL06030-C1-C

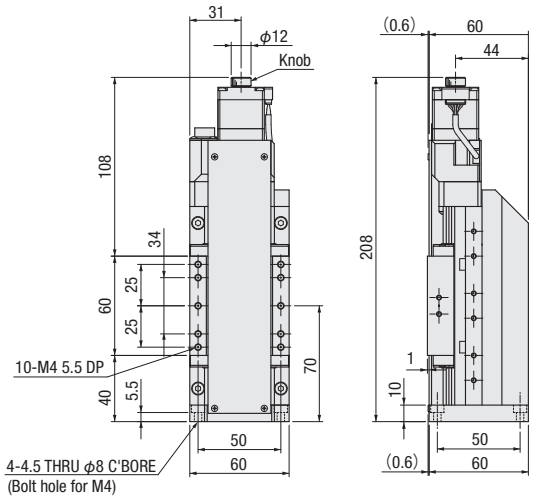

KZL06050-N1-C

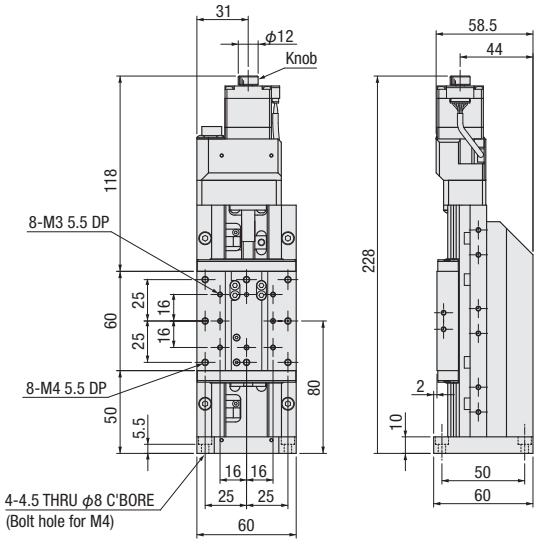

KZL06050-C1-C

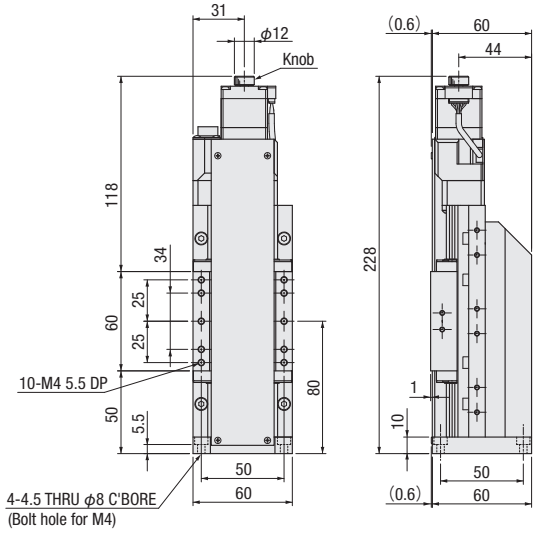

KZL06075-N1-C

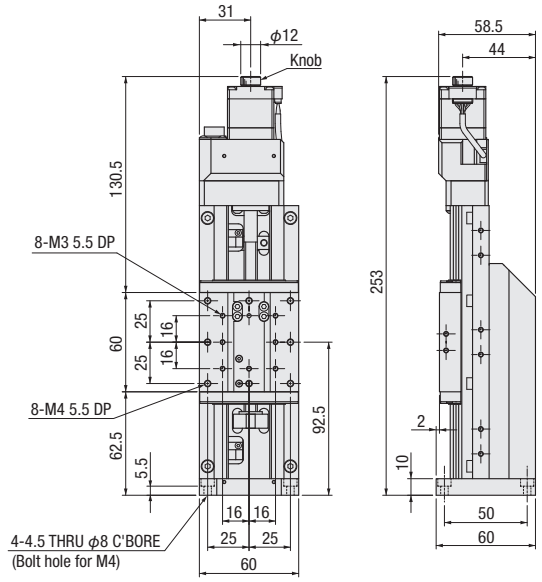

KZL06075-C1-C

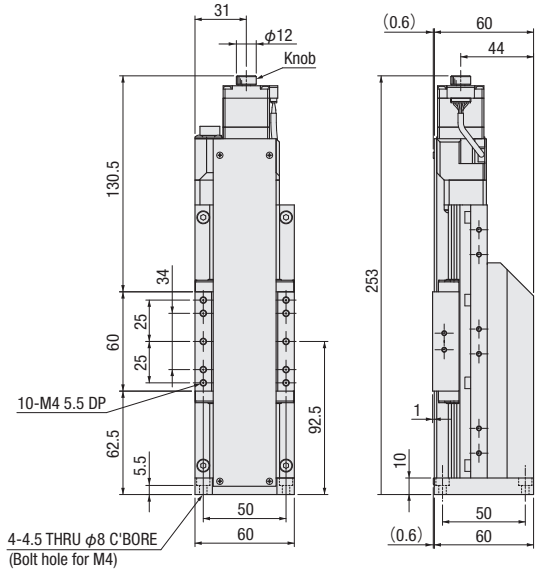

CAVE-X POSITIONER

XYZ-axis Linear Ball Guide: KWL06030/KWL06050

KWL06030-N

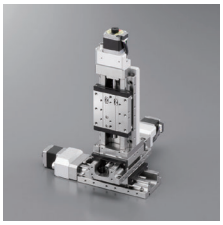

KWL06050-N

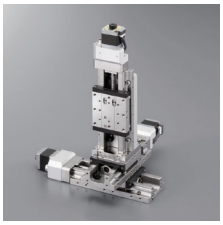

KWL06030-C

KWL06050-C

RoHS

Model | Selection code | Option code

KWL06 030-N1-C □ □

1 2 3 4 5 6

Cable P.1-207～
Electrical specification P.1-077～

1 Travel length

030	30mm
050	50mm

2 Cover type

N	Uncovered	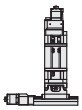
C	Covered	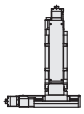

3 Ball screw lead selection

1	Lead 1mm

4 Motor option

Code	Specification
C	Standard
F	High-torque
G	High resolution
MA	With electromagnetic brake (Driver set)
PA	α Step (Driver set)
UA	Servo motor (Amplifier set)

* Code MA · PA · UA is the set of driver and cable.
* See page P.1-077~ for details of motor option.

5 Origin sensor option

Code	Specification
Blank	None
1	CCW right side
2	CCW left side
3	Center right side
4	Center left side
5	CW right side
6	CW left side

* See page P.1-079~ for details of origin sensor option.

■Position of origin sensor option (Please choose one position)

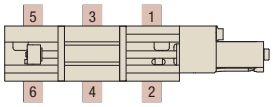

6 Cable option

Code	Specification	Cable type
A	2m	D214-2-2E
B	2m One end loose	D214-2-2EK
C	4m	D214-2-4E
D	4m One end loose	D214-2-4EK
E	Only connector (Cable is not included)	—
F	Robot cable 2m	D214-2-2R
G	Robot cable 2m one end loose	D214-2-2RK
H	Robot cable 4m	D214-2-4R
J	Robot cable 4m one end loose	D214-2-4RK
M	Cable for electromagnetic brake	—
P	Cable for α step	
U	Cable for servo motor	
Blank	Cable is not included (Standard)	—

* One end loose position to only stage opposite side.
* The price includes M, P and U.
  Not available non-cable.
* See page P.1-207,209~ for details of cable.
* Please select "Code A, C, F or H" when connect with stepping motor controller(DS102/112).

[Note]
Please check available cable from compatibility list.
Not included cable for a main body. Please choose the code as below.

	Motor code	Cable code
Motor/cable products list	C,F,G	Blank, A～H,J
	MA	M
	PA	P
	UA	U

SPEC

Model		Uncovered		Covered	
		KWL06030-N1-C	KWL06050-N1-C	KWL06030-C1-C	KWL06050-C1-C
Mechanical specification	Travel length	30mm	50mm	30mm	50mm
	Table size	60×60mm			
	Feed screw (Ball screw)	ϕ8 lead 1			
	Guide	Linear ball guide			
	Main materials-Finishing	Stainless–Opposite side of the end face finishing			
	Weight	4.56kg	4.92kg	4.74kg	5.04kg
Accuracy specification	Resolution (Pulse) Full/Half	2μm/1μm			
	Resolution (Pulse) Microstep	0.1μm (1/20 on resolution)			
	MAX speed	20mm/sec			
	Load capacity	7kgf [68.6N]			
	Perpendicularity	Within 15μm/Full stroke	Within 25μm/Full stroke	Within 15μm/Full stroke	Within 25μm/Full stroke
Sensor	Limit sensor	Installed			
	Origin sensor	– *Attachable in origin sensor option			
	Slit origin sensor	–			
Provided screw (Hexagon-headed bolt)		8 of M4—14			

Single axis accuracy specification	Uni-directional positioning accuracy	Within 5μm
	Repeatability positioning accuracy	Within ±0.5μm
	Lost motion	Within 1μm
	Backlash	Within 1μm
	Straightness	Within 3μm
	Pitching/Yawing	Within 20″/Within 15″

* Might be changed specification due to motors. See page P.1-213~ for details.

CAD PART COMMUNITY CAD DATA SURUGA SEIKI CAD 3D·2D

Dimensional outline drawings

KWL06030-N1-C

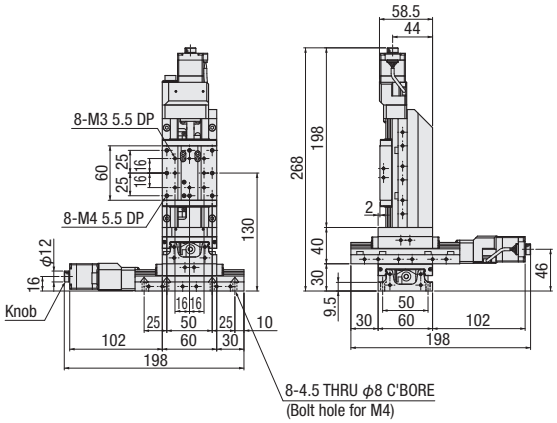

KWL06030-C1-C

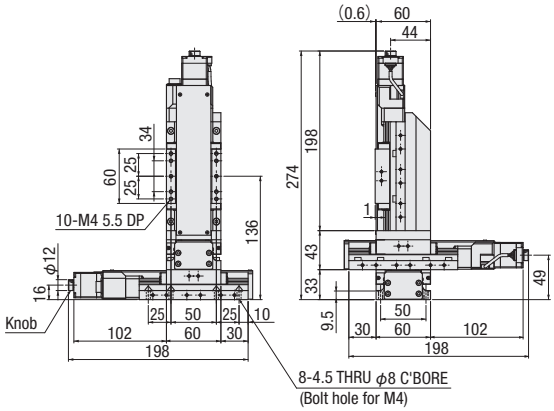

KWL06050-N1-C

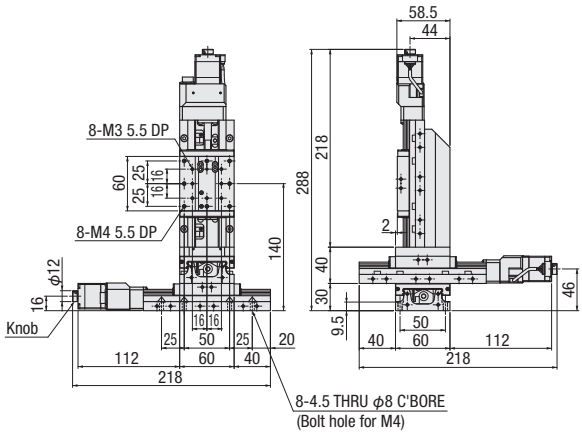

KWL06050-C1-C

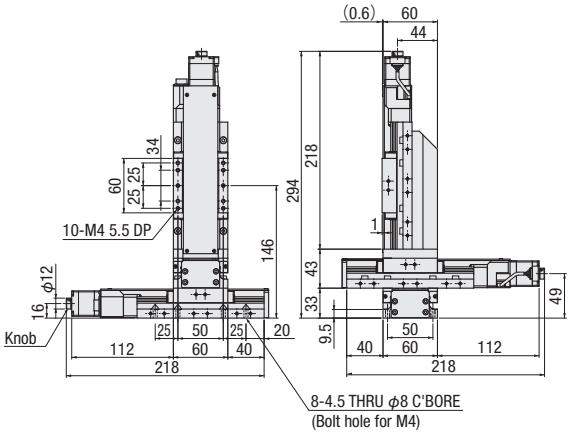

Electrical Specification: KXL Series

Motor • Electrical specification

Motor code			C	F	G	MA	PA	UA	
Models			KXL06030 / KXL06050 / KXL06075						
			KXL06100 / KXL06150 / KXL06200 / KXL06300						
MotorSpecification (*1)	Type		5 phase stepping motor 0.75A/Phase			5 phase 0.35A/Phase	α step motor	AC servo motor	
	Feature		Standard	High-torque	High resolution	With electromagnetic brake	Small step-out	High speed	
	Model (*2)		C005C-90215P	PK525HPB-C1	PK523HPMB-C1	PKE545MC-A1	ARM24SAK	HG-KR053	
	Electromagnetic brake		–			Installed	–		
	Maker		Oriental Motor Co., Ltd.					Mitsubishi Electric corporation	
	Step angle (Position detector)		0.72°		0.36°	0.72°	0.36° (Set to 1000P/R)	22 bits encoder (4194304P/R)	
	Mass		0.11kg	0.2kg	0.11kg	0.52kg	0.15kg	0.34kg	
	Motor size	□size	28mm			42mm	28mm	40mm	
		L size	42mm	61.5mm	42mm	69mm	45mm	66.4mm	
	Excitation (moment) maximum torque		0.041N・m	0.073N・m	0.038N・m	0.240N・m	0.055N・m	0.560N・m	
	Driver type		▶ P.1-205～			RKSD503M-A	ARD-K	MR-J4-10A	
	Input power (Voltage・frequency)					Single phase AC100-120V 50/60Hz	DC24V±10%	Three and single phase AC200-240V 50/60Hz	
Sensor	Limit sensor		Installed						
	Origin sensor		– *Sensor should be PM-L25 (Panasonic Industrial Devices SUNX) when select the origin sensor						
	Slit origin sensor		–						
	Model		Micro Photoelectric Sensor PM-L25 (Panasonic Industrial Devices SUNX)						
	Power voltage		DC5～24V ±10%						
	Consumption current		Total 45mA or less (15mA or less per 1 sensor)						
	Control output		NPN open collector output DC30V or less 50mA or less Residual voltage 2V or less when the load current is 50mA Residual voltage 1V or less when the load current is 16mA						
	Output logic		On detection (light shield condition): Output transistor OFF (Non-continuity)						
Connector	Motor	Model	HR10A-10R-12P (73) (Hirose Electric Co., Ltd.)			motor side: 5557-06R-210 electromagnetic brake side: 5557-02R-210 (MOLEX)	43025-1000 (Japan Molex)	Motor cable	–
								Encoder	–
		Receiving connector	HR10A-10P-12S (73) (Hirose Electric Co., Ltd.)			motor side: 5559-06P-210 electromagnetic brake side: 5559-02P-210 (MOLEX)	43020-1000 (Japan Molex)	Motor cable	JN4FT04SJ1-R (JAE)
								Encoder	1674320-1 (Tyco Electronics Japan G.K.)
	Sensor	Model	HR10A-10R-12P (73) (Hirose Electric Co., Ltd.)※In common with a motor			HR10A-7J-6P (73) (Hirose Electric Co., Ltd.)			
		Receiving connector	HR10A-10P-12S (73) (Hirose Electric Co., Ltd.)※In common with a motor			HR10A-7P-6S (73) (Hirose Electric Co., Ltd.)			
Accuracy specification	Resolution: Lead 1mm	Full/Half	2μm/1μm		1μm/0.5μm	2μm/1μm	1μm/0.5μm	22 bits encoder (4194304P/R)	
		Micro step (1/20 split)	0.1μm		0.05μm	0.1μm	–		
	Resolution: Lead 2mm	Full/Half	4μm/2μm		2μm/1μm	4μm/2μm	2μm/1μm		
		Micro step (1/20 split)	0.2μm		0.1μm	0.2μm	–		
	Max. speed	Lead 1mm	30mm/sec	35mm/sec	25mm/sec	25mm/sec	40mm/sec	50mm/sec	
		Lead 2mm	35mm/sec	45mm/sec	30mm/sec	40mm/sec	80mm/sec	100mm/sec	

*1 See page ▶ P.1-213~ for details of single motor specification *2 Model is our own management model. * The electric specification of XY , Z, XYZ are the same.

Dimensional outline drawings

Side view

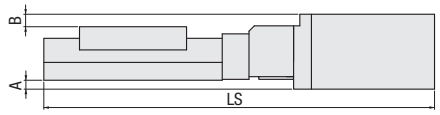

Top view

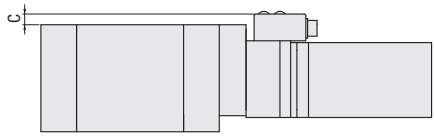

■Standard type

Motor code	Size □[mm]	A	B	C	LS 30	LS 50	LS 75	LS 100	LS 150	LS 200	LS 300
C	28	–	0.5	–	198	218	243	268	318	368	468
F	28	–	0.5	–	218	238	263	288	338	388	488
G	28	–	0.5	–	198	218	243	268	318	368	468
MA	42	5	7	6	245	265	290	315	365	415	515
PA	28	–	0.5	6	211	231	256	281	331	381	481
UA	40	4.7	6.5	6	240.4	260.4	285.4	310.4	360.4	410.4	510.4

■Covered type

Motor code	Size □[mm]	A	B	C	LS 30	LS 50	LS 75	LS 100	LS 150	LS 200	LS 300
C	28	–	–	–	203	223	248	273	323	373	473
F	28	–	–	–	223	243	268	293	343	393	493
G	28	–	–	–	203	223	248	273	323	373	473
MA	42	5	4	6	250	270	295	320	370	420	520
PA	28	–	–	6	216	236	261	286	336	386	486
UA	40	4.7	3.5	6	245.4	265.4	290.4	315.4	365.4	415.4	515.4

Note: The motor connector is projected from the upper, bottom and side surface in the motor code MA.

Pin allocation・Connection diagram

Motor code		KXL series
C・F・G	Available for motor and sensor	

[Motor and sensor pin allocation (the same)]

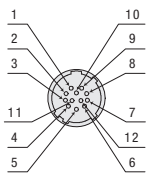

[Motor and sensor connection diagram (the same)]

Pin	Signal
1	Motor lead (Blue)
2	Motor lead (Red)
3	Motor lead (Orange)
4	Motor lead (Green)
5	Motor lead (Black)
6	CWLS output
7	CCWLS output
8	Open
9	Power input (+)
10	ORG output
11	Power input (-)
12	F.G.

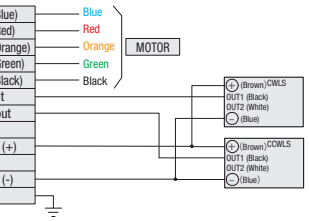

*Cable must be selected from option code of each products.
See page ▶ P.1-207,209 for details of cable.

Motor code		KXL series
PA	Motor	

*Motor cable model:CC030VA2R2 See page ▶ P.1-212 for details.

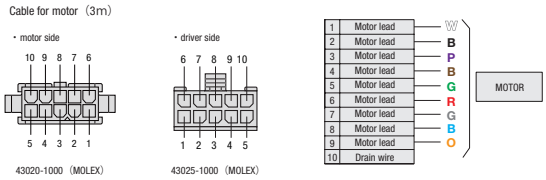

Motor code		KXL series
PA	Sensor	

[Motor and sensor pin allocation (sensor)]

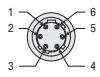

[Motor and sensor connection diagram (sensor)]

Pin	Signal
1	CWLS output
2	CCWLS output
3	ORG output
4	NORG output
5	Power input (+)
6	Power input (-)

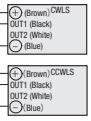

*Cable model:HR10AP-S-SB-6-2 See page ▶ P.1-214 for details

Sensor side

Pin	Signals
1	CWLS
2	CCWLS
3	ORG
4	NORG
5	V+
6	V–

* The shields are connected with the connector shell.

Motor code		KXL series
MA	Motor	

*Motor cable model:CC030VPFB See page ▶ P.1-213 for details.

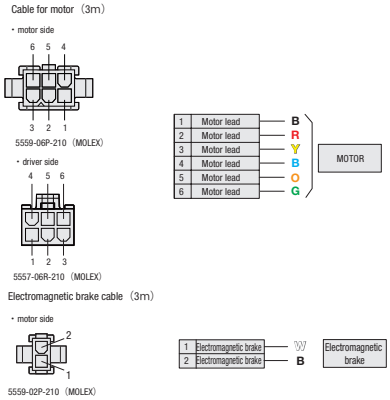

Motor code		KXL series
MA	Sensor	

[Motor and sensor pin allocation (sensor)]

[Motor and sensor connection diagram (sensor)]

Pin	Signal
1	CWLS output
2	CCWLS output
3	ORG output
4	NORG output
5	Power input (+)
6	Power input (-)

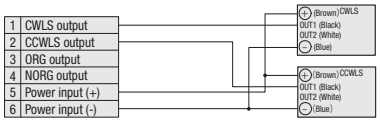

*Cable model:HR10AP-S-SB-6-2 See page ▶ P.1-214 for details.

Sensor side

Pin	Signals
1	CWLS
2	CCWLS
3	ORG
4	NORG
5	V+
6	V–

* The shields are connected with the connector shell.

Motor code		KXL series
UA	Motor	

*Motor cable model:SVPM-J3HF1-B-3-02SSee page ▶ P.1-211 for details.

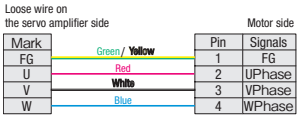

*encoder cable model:SVEM-J3HF1-B-3 See page ▶ P.1-211 for details.

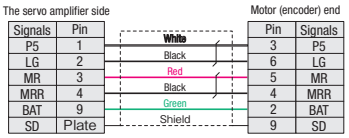

Motor code		KXL series
UA	Sensor	

[Motor and sensor pin allocation (sensor)]

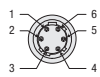

[Motor and sensor connection diagram (sensor)]

Pin	Signal
1	CWLS output
2	CCWLS output
3	ORG output
4	NORG output
5	Power input (+)
6	Power input (-)

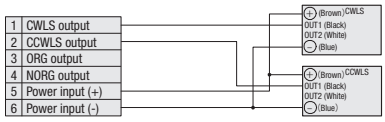

*Cable model:HR10AP-S-SB-6-2 See page ▶ P.1-214 for details.

Sensor side

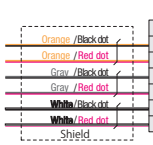

Pin	Signals
1	CWLS
2	CCWLS
3	ORG
4	NORG
5	V+
6	V–

* The shields are connected with the connector shell.

Cable type

Great deal purchase both of cable and code.
Cable connection diagram shows page ▶ P.1-207~

Code	Specification	Cable type
A	2m	D214-2-2E
B	2m One end loose	D214-2-2EK
C	4m	D214-2-4E
D	4m One end loose	D214-2-4EK
F	Robot cable 2m	D214-2-2R
H	Robot cable 4m	D214-2-4R
G	Robot cable 2m one end loose	D214-2-2RK
J	Robot cable 4m one end loose	D214-2-4RK

■Motor code [MA・PA・UA] compatible cable

One set for motor driver and motor cable(encoder)

Motor code	Cable code	Driver type	Motor cable	Encoder cable	Sensor cable
MA	M	RKSD503M-A (Oriental Motor Co., Ltd.)	CC030VPFB ▶ P.1-213「Motor code MA」	—	HR10AP-S-SB-6-2 ▶ P.1-214 Refer sensor connection diagram
PA	P	ARD-K (Oriental Motor Co., Ltd.)	CC030VA2R2 ▶ P.1-212「Motor code PA」	—	
UA	U	MR-J4-10A (Mitsubishi Electric corporation)	SVPM-J3HF1-B-3-02S ▶ P.1-211「Motor code UA」	SVEM-J3HF1-B-3 ▶ P.1-211「Motor code UA」	

Electrical Specification: KXL Series

Timing chart

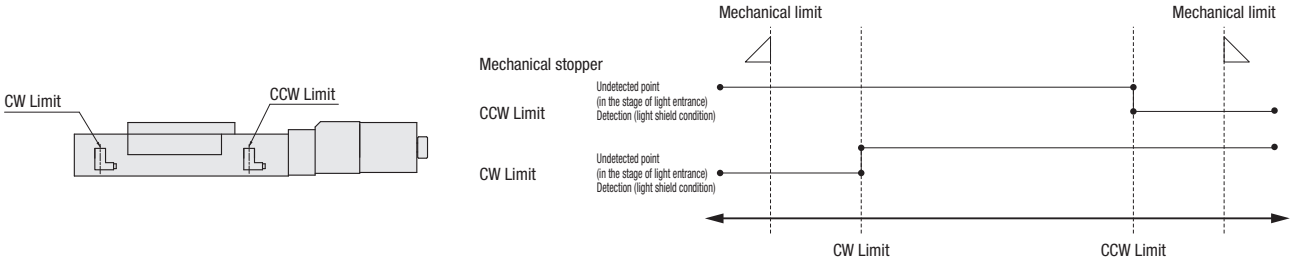

Unit [mm] Direction of CW ◄──────► Direction of CCW

	Reference coordinate	Mechanical limit	CW Limit	CCW Limit	Mechanical limit
KXL06030	Stroke center	17.5	15.5	15.5	17.5
KXL06050	Stroke center	27.5	25.5	25.5	27.5
KXL06075	Stroke center	40	37.5	37.5	40
KXL06100	Stroke center	52.5	50.5	50.5	52.5
KXL06150	Stroke center	77.5	75.5	75.5	77.5
KXL06200	Stroke center	102.5	100.5	100.5	102.5
KXL06300	Stroke center	152.5	150.5	150.5	152.5

* The coordinate value should be on the design. Dimension error may occur about plus or minus 0.5 mm.

Note: The timing chart shows only timing of sensor, it is not for output signal logic.
Refer to ON/OFF display of output transistor that shows on electrical specifications-sensor-output logic for output signal logic.

Sensor option dimensions

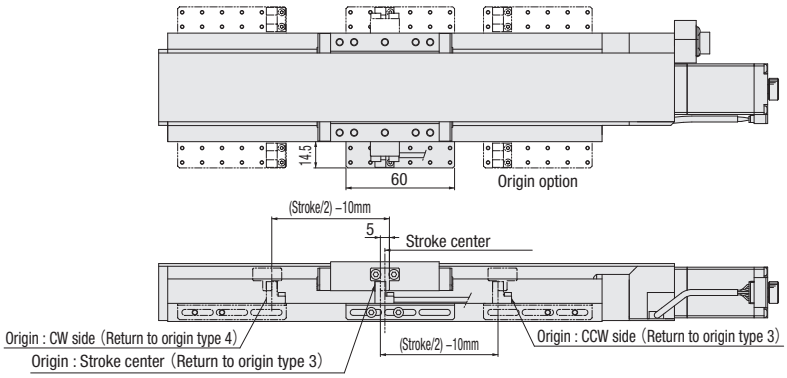

KXL series recommendation return to origin method

Suruga's motorized stages are different from the specification depending on the models. Therefore return to origin method other than recommendation may not be work correctly. Set to the way of recommendation return origin when using our controller.

■ Origin sensor option when not use

【Type5】Detect in the direction of CCW and perform detected process for CW edge (point a) of CWLS signal.

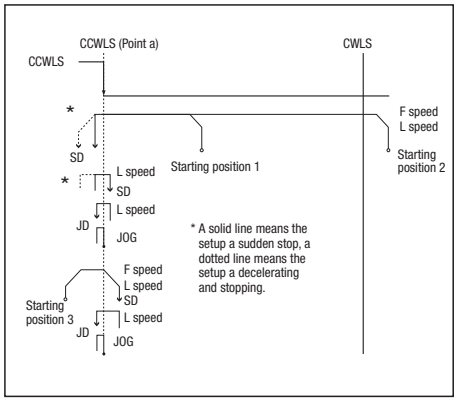

【Type6】Detect in the direction of CW and perform detected process for CCW edge (point a) of CWLS signal.

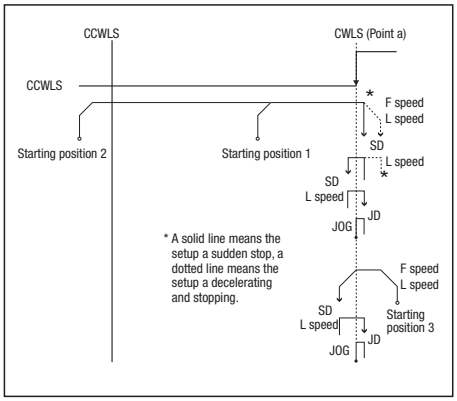

【Type11】
After finished type5, perform detected process for CCW edge of TIMING signal.

【Type12】
After finished type6, perform detected process for CW edge of TIMING signal.

■ Origin sensor option when use

[Type3] Detect in the direction of CCW and perform detected process for CCW edge (a point) of ORG signal.

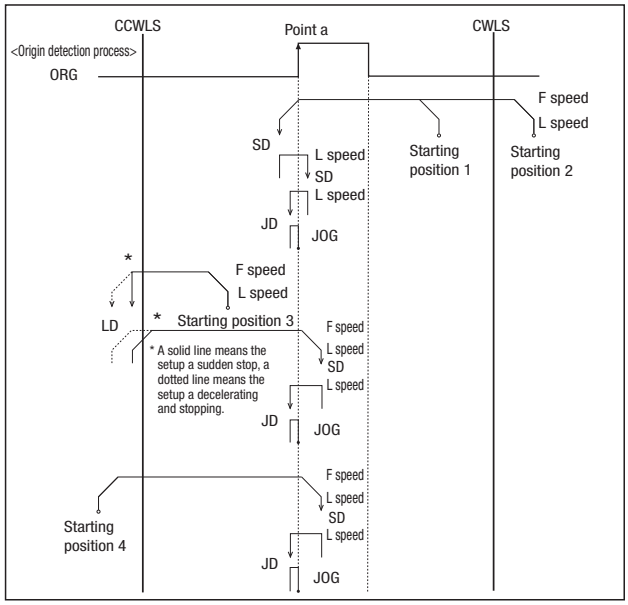

[Type4] Detect in the direction of CW and perform detected process for CW edge of ORG signal.

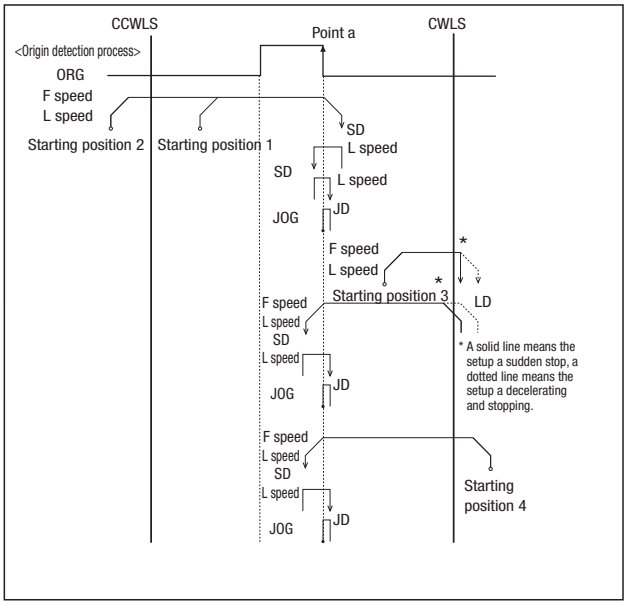

[Type9] After finished Type3, perform detected process for CCW edge of TIMING signal.

[Type10] After finished Type4, perform detected process for CW edge of TIMING signal.

Return to senquence ▶ P.1-201～

Adaptive driver

■ Driver ▶ P.1-205～

DC24 type input

Model	CRD5107P	SD5107P3-A22
Divisions	Micro step (1~1/250 [16 steps])	Normal (Full/Half)

AC100V input

Model	RKD507-A
Divisions	Micro step (1~1/250 [16 steps])

Adaptive stepping motor controller

■ Controller ▶ P.1-197～

Input power	General-purpose input/output port	Driver type (Divisions)		
		Normal (Full/Half)	Micro step (1~1/250 [16 steps])	
AC100-240V	Without	DS102NR	DS102MS	DS112/102
	With	DS102NR-IO	DS102MS-IO	
DC24V	Without	DS112NR	DS112MS	
	With	DS112NR-IO	DS112MS-IO	