X-axis Linear Ball Guide: PG413/PG513/PG615/PG715

PG615-L

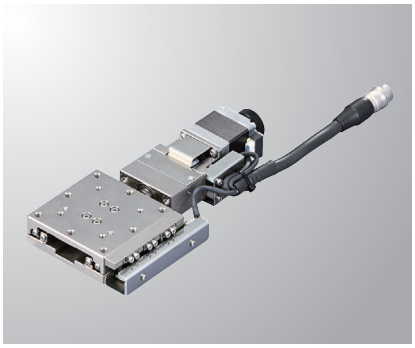

PG615-R

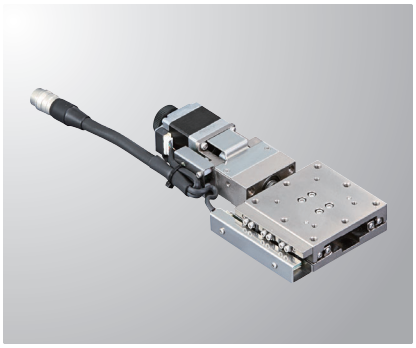

RoHS

Model | Selection code | Option code

PG 413-L05AG-C 5

1 2 3 4 5 6 7

Cable P.1-207～
Electrical specification P.1-037～

1 Table size

4	□40mm
5	□50mm
6	□60mm
7	□70mm

2 Travel length

13	13mm
15	15mm

* Cannot choose 415, 515, 613, 713 in combination with 1 and 2.

3 Sensor cover location

L	L position
R	Opposite hand

4 Sensor voltage

05	5V
24	24V

* 05 [5V] for standard

5 Sensor logic

A	N.C.
B	N.O.
C	Limit sensor is N.C.. ORG1 and ORG2 are N.O.

* The sensor voltage/logic is different, but the external form dimention is the same.
* If you choose 24V, not available our controller DS102/112.

6 Motor option

Code	Specification
C	Standard
D	High-torque
E	High resolution
MA	With electromagnetic brake (Driver set)
PA	α Step (Driver set)
UA	Servo motor (Amplifier set)

* Code MA · PA · UA is the set of driver and cable.
* See page P.1-037~ for details of motor option.

7 Cable option

※See page P.1-039~ for ORG2 compatible cable.

Code	Specification	Cable type
Blank	2m	D214-2-2E
1	2m One end loose	D214-2-2EK
2	4m	D214-2-4E
3	4m One end loose	D214-2-4EK
4	Only connector (Cable is not included)	—
5	Cable is not included (Standard)	—
6	Robot cable 2m	D214-2-2R
7	Robot cable 4m	D214-2-4R
8	Robot cable 4m one end loose	D214-2-4RK
9	Robot cable 2m one end loose	D214-2-2RK
M	Cable for electromagnetic brake	—
P	Cable for α step	
U	Cable for servo motor	

* One end loose position to only stage opposite side.
* The price includes M, P and U.
  Not available non-cable.
  See page P.1-207,209~ for details of cable.
  Please select "blank, 2, 6 and 7" when connect with stepping motor controller(DS102/112).

[Note]
Please check available cable from compatibility list.

	Motor code	Cable code
Motor/cable products list	C, D, E	Blank, 1～9
	MA	M
	PA	P
	UA	U

SPEC

	Model (Opposite hand)	PG413-L05AG-C5 / PG413-R05AG-C5	PG513-L05AG-C5 / PG513-R05AG-C5	PG615-L05AG-C5 / PG615-R05AG-C5	PG715-L05AG-C5 / PG715-R05AG-C5
Mechanical specification	Travel length	13mm		15mm	
	Table size	40×40mm	50×50mm	60×60mm	70×70mm
	Feed screw (Ball screw)	φ6 lead 1			
	Guide	Linear ball guide			
	Main materials-Finishing	Stainless–Opposite side of the end face finishing			
	Weight	0.5kg	0.6kg	0.7kg	0.9kg
Accuracy specification	Resolution (Pulse)	2μm (Full)/1μm (Half)			
	MAX speed	10mm/sec			
	Uni-directional positioning accuracy	Within 6μm			
	Repeatability positioning accuracy	Within ±0.5μm			
	Load capacity	10kgf [98N]			
	Moment stiffness	Pitch 0.22/yaw 0.17/ roll 0.12 [″/N・cm]	Pitch 0.14/yaw 0.10/ roll 0.06 [″/N・cm]	Pitch 0.08/yaw 0.07/ roll 0.03 [″/N・cm]	Pitch 0.03/yaw 0.03/ roll 0.01 [″/N・cm]
	Lost motion	Within 1μm			
	Backlash	Within 0.5μm			
	Straightness	Within 1μm			
	Parallelism	Within 15μm			
	Motion parallelism	Within 5μm			
	Pitching/Yawing	Within 15″/Within 10″			
Sensor	Limit sensor	Installed			
	Origin sensor (ORG1)	Installed			
	Slit origin sensor (ORG2)	Installed See page P.1-039~			
Provided screw (Hexagon-headed bolt)		4 of M3—8		4 of M4—8	

※ Might be changed specification due to motors. See page P.1-213~ for details.

Motor option

C Standard motor
Motor model
PK523HPB-C15

D High-torque
Motor model
PK525HPB

E High resolution
Motor model
PK523HPMB

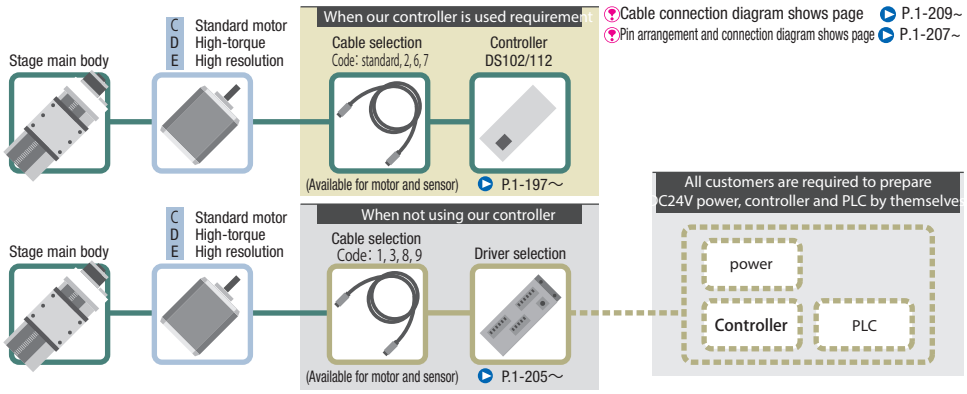

Cable connection diagram shows page P.1-209~
Pin arrangement and connection diagram shows page P.1-207~

Motor option

MA With electromagnetic brake
Motor model
PKE545MC-A1

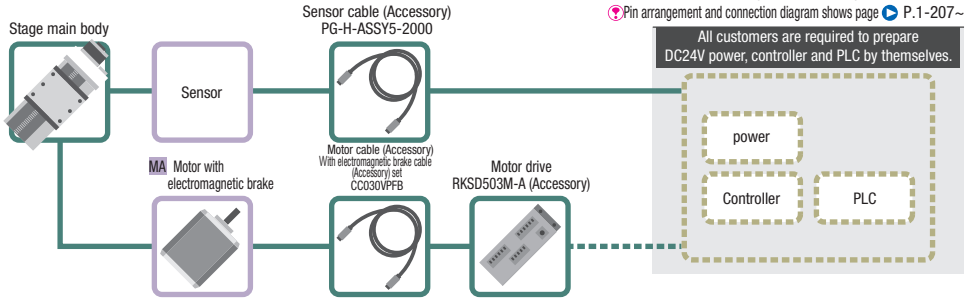

Cable connection diagram shows page P.1-209~
Pin arrangement and connection diagram shows page P.1-207~

Motor option

PA α Step
Motor model
ARM24SAK

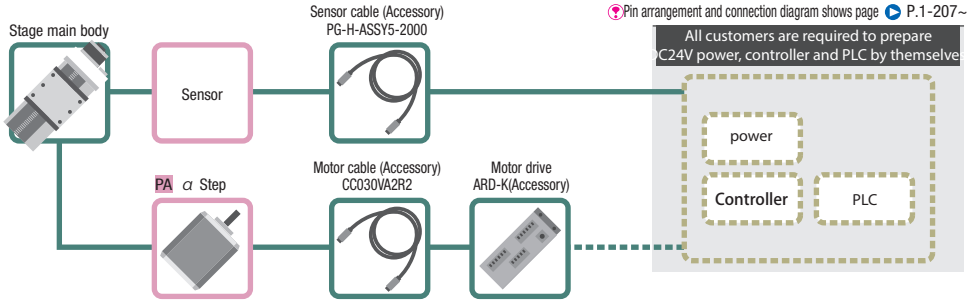

Cable connection diagram shows page P.1-209~
Pin arrangement and connection diagram shows page P.1-207~

Motor option

UA AC servo motor
Motor model
HG-KR053

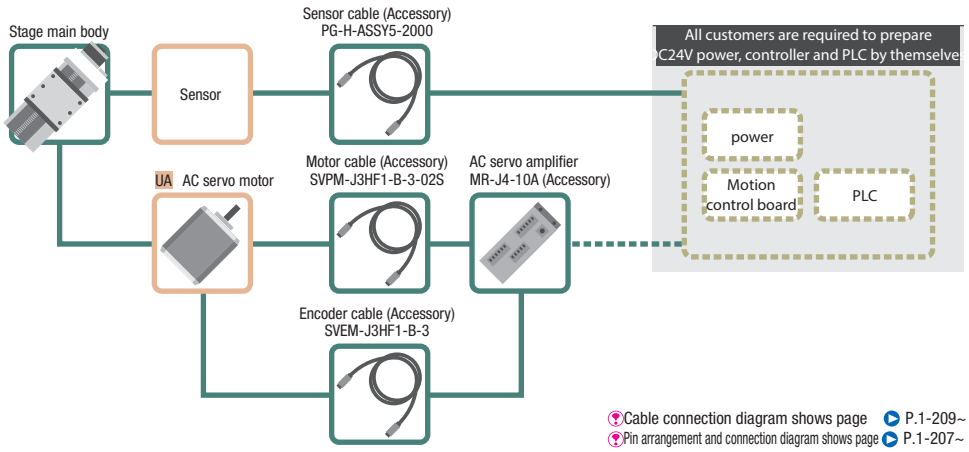

Cable connection diagram shows page P.1-209~
Pin arrangement and connection diagram shows page P.1-207~

Motor code			C	D	E	MA	PA	UA
Feature			Standard	High-torque	High resolution	With electromagnetic brake	Small step-out	High speed
Type			5 phase stepping motor 0.75A/Phase			5 phase 0.35A/Phase	α step motor	AC servo motor
Model*			**PK525HPB-C15**	**PK525HPB**	**PK523HPMB**	**PKE545MC-A1**	**ARM24SAK**	**HG-KR053**
Resolution	Lead 1mm	Full/Half	2μm/1μm		1μm/0.5μm	2μm/1μm	1μm (Set to 1000P/R)	22 bits encoder (4194304P/R)
		Micro step (1/20 split)	0.1μm		0.05μm	0.1μm	–	
MAX speed	Lead 1mm		10mm/sec	30mm/sec	25mm/sec	20mm/sec	35mm/sec	50mm/sec

* Model is our own management model.

X-axis Linear Ball Guide : PG413/PG513/PG615/PG715

PG615-L

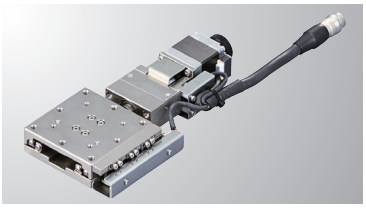

PG615-R

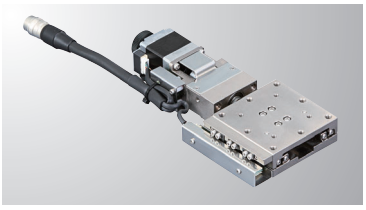

Dimensional outline drawings

PG413-L

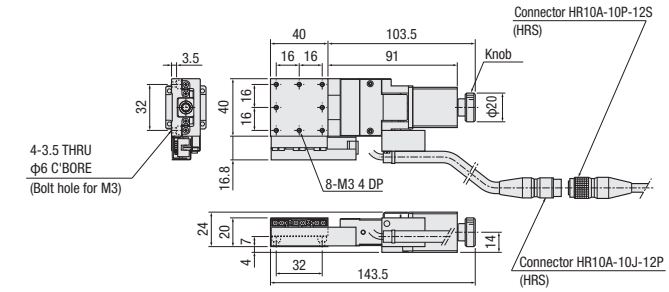

PG413-R

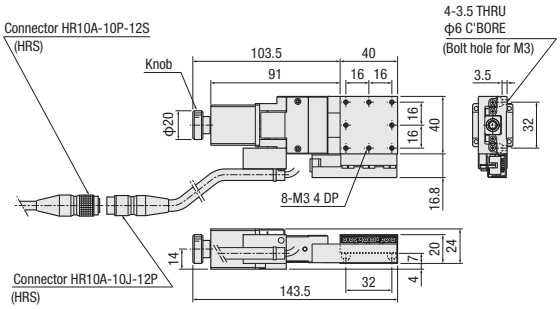

PG513-L

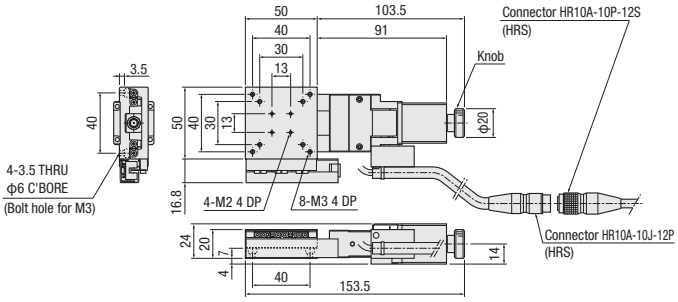

PG513-R

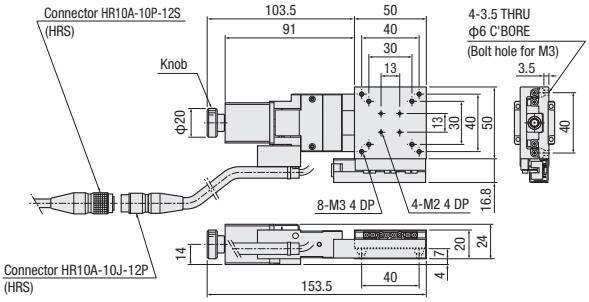

PG615-L

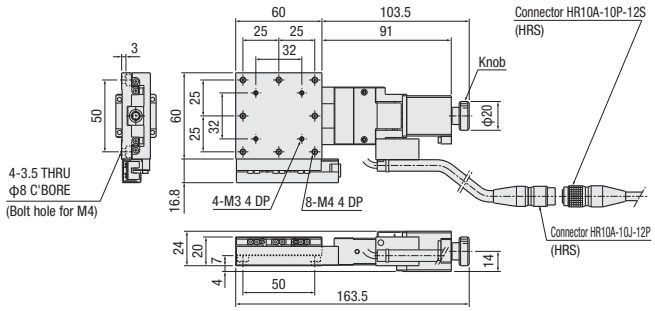

PG615-R

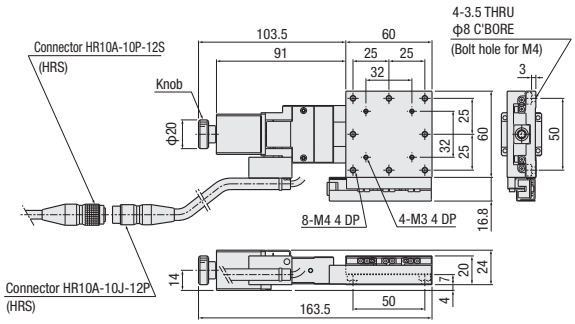

PG715-L

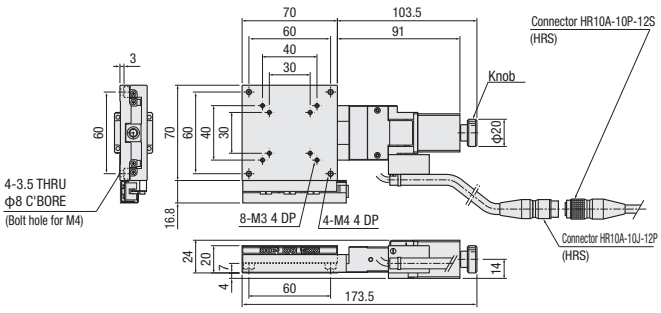

PG715-R

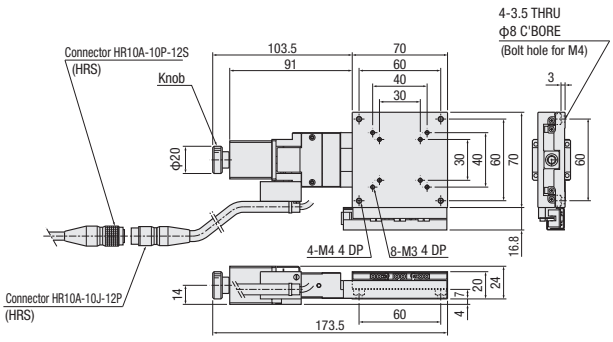

PART COMMUNITY CAD DATA
SURUGA SEIKI CAD 3D·2D

Dimensional outline drawings

C Standard motor
Motor model PK525HRB-C15

D High-torque
Motor model PK525HPB

E High resolution
Motor model PK523HPMB

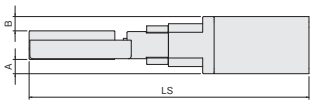

Model	C (Standard) /D (High-torque) / E (High resolution) Common			C (Standard)	D (High-torque)	E (High resolution)
	Motor size	A	B	LS		
PG413-∗∗∗∗-□	□28	4	4	142.5	163	143.5
PG513-∗∗∗∗-□				152.5	173	153.5
PG615-∗∗∗∗-□				162.5	183	163.5
PG715-∗∗∗∗-□				172.5	193	173.5

MA With electromagnetic brake
Motor model PKE545MC-A1

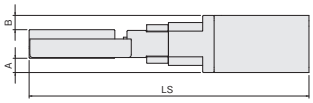

Model	MA (With electromagnetic brake)			C (Standard)
	Motor size	A	B	LS
PG413-∗∗∗∗-MA	□42	11	11	180	143.5
PG513-∗∗∗∗-MA				190	153.5
PG615-∗∗∗∗-MA				200	163.5
PG715-∗∗∗∗-MA				210	173.5

PA α step
Motor model ARM24SAK

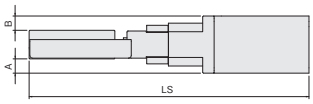

Model	PA (α step)			C (Standard)
	Motor size	A	B	LS
PG413-∗∗∗∗-PA	□28	4	4	144	143.5
PG513-∗∗∗∗-PA				154	153.5
PG615-∗∗∗∗-PA				164	163.5
PG715-∗∗∗∗-PA				174	173.5

UA AC servo motor
Motor model HG-KR053

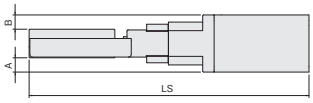

Model	UA (AC servo motor)			C(Standard)
	Motor size	A	B	LS
PG413-∗∗∗∗-UA	□40	10.7	10.5	175.9	143.5
PG513-∗∗∗∗-UA				185.9	153.5
PG615-∗∗∗∗-UA				195.9	163.5
PG715-∗∗∗∗-UA				205.9	173.5

X-axis Linear Ball Guide: PG430/PG530/PG650/PG750

PG650-L

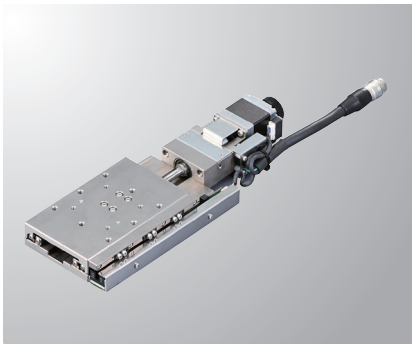

PG650-R

RoHS

Model / Selection code / Option code

PG 430-L05AG-C 5

1 2 3 4 5 6 7

Cable P.1-207～
Electrical specification P.1-037～

1 Table size

4	40×60mm
5	50×70mm
6	60×100mm
7	70×110mm

* Cannot choose 450, 550, 630, 730 in combination with 1 and 2.

2 Travel length

30	30mm
50	50mm

3 Sensor cover location

L	L position
R	Opposite hand

4 Sensor voltage

05	5V
24	24V

* 05 [5V] for standard

5 Sensor logic

A	N.C.
B	N.O.
C	Limit sensor is N.C.. ORG1 and ORG2 are N.O.

* The sensor voltage/logic is different, but the external form dimention is the same.
* If you choose 24V, not available our controller DS102/112.

6 Motor option

Code	Specification
C	Standard
D	High-torque
E	High resolution
MA	With electromagnetic brake (Driver set)
PA	α Step (Driver set)
UA	Servo motor (Amplifier set)

* Code MA · PA · UA is the set of driver and cable.
* See page P.1-037~ for details of motor option. about motors.

7 Cable option

※See page P.1-039~ for ORG2 compatible cable.

Code	Specification	Cable type
Blank	2m	D214-2-2E
1	2m One end loose	D214-2-2EK
2	4m	D214-2-4E
3	4m One end loose	D214-2-4EK
4	Only connector (Cable is not included)	—
5	Cable is not included (Standard)	—
6	Robot cable 2m	D214-2-2R
7	Robot cable 4m	D214-2-4R
8	Robot cable 4m one end loose	D214-2-4RK
9	Robot cable 2m one end loose	D214-2-2RK
M	Cable for electromagnetic brake	—
P	Cable for α step	
U	Cable for servo motor	

* One end loose position to only stage opposite side.
* The price includes M, P and U.
  Not available non-cable.
  See page P.1-207,209~ for details of cable.
  Please select "blank, 2, 6 and 7" when connect with stepping motor controller(DS102/112).

[Note]
Please check available cable from compatibility list.

	Motor code	Cable code
Motor/cable products list	C, D, E	Blank, 1～9
	MA	M
	PA	P
	UA	U

SPEC

Model		**PG430-L05AG-C5**	**PG530-L05AG-C5**	**PG650-L05AG-C5**	**PG750-L05AG-C5**
(Opposite hand)		**PG430-R05AG-C5**	**PG530-R05AG-C5**	**PG650-R05AG-C5**	**PG750-R05AG-C5**
Mechanical specification	Travel length	30mm		50mm	
	Table size	40×60mm	50×70mm	60×100mm	70×110mm
	Feed screw (Ball screw)	φ6 lead 1			
	Guide	Linear ball guide			
	Main materials-Finishing	Stainless–Opposite side of the end face finishing			
	Weight	0.6kg	0.78kg	1.08kg	1.16kg
Accuracy specification	Resolution (Pulse)	2μm (Full)/1μm (Half)			
	MAX speed	10mm/sec			
	Uni-directional positioning accuracy	Within 12μm			
	Repeatability positioning accuracy	Within ±0.5μm			
	Load capacity	10kgf [98N]			
	Moment stiffness	Pitch 0.24/yaw 0.18/ roll 0.26 [″/N・cm]	Pitch 0.12/yaw 0.13/ roll 0.1 [″/N・cm]	Pitch 0.05/yaw 0.05/ roll 0.05 [″/N・cm]	Pitch 0.03/yaw 0.03/ roll 0.03 [″/N・cm]
	Lost motion	Within 1μm			
	Backlash	Within 0.5μm			
	Straightness	Within 2μm			
	Parallelism	Within 15μm			
	Motion parallelism	Within 10μm			
	Pitching/Yawing	Within 20″/Within 15″			
Sensor	Limit sensor	Installed			
	Origin sensor (ORG1)	Installed			
	Slit origin sensor (ORG2)	Installed Refer page P.1-039~			
Provided screw (Hexagon-headed bolt)		4 of M3—8		4 of M4—8	

※ Specification will be changed due to a motor. Refer page P.1-213.

The vertical load guideline 5kgf when use on Z-axis because of difference the load or speed.

Motor option

C Standard motor
Motor model
PK523HPB-C15

D High-torque
Motor model
PK525HPB

E High resolution
Motor model
PK523HPMB

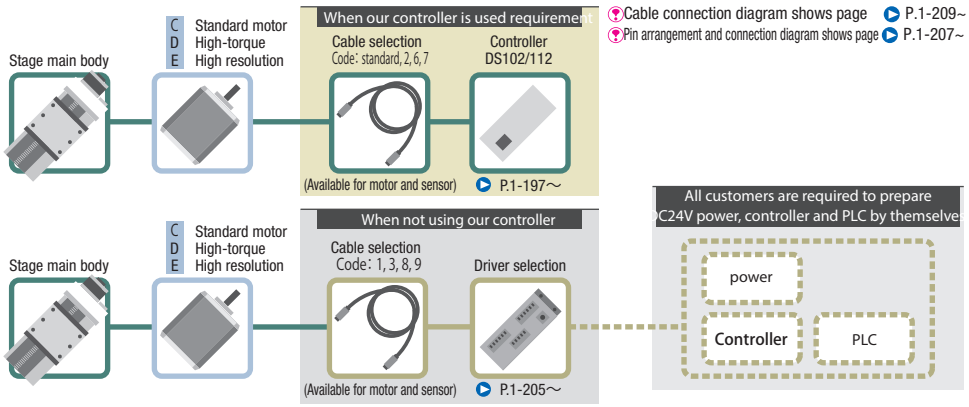

Cable connection diagram shows page P.1-209~
Pin arrangement and connection diagram shows page P.1-207~

Motor option

MA With electromagnetic brake
Motor model
PKE545MC-A1

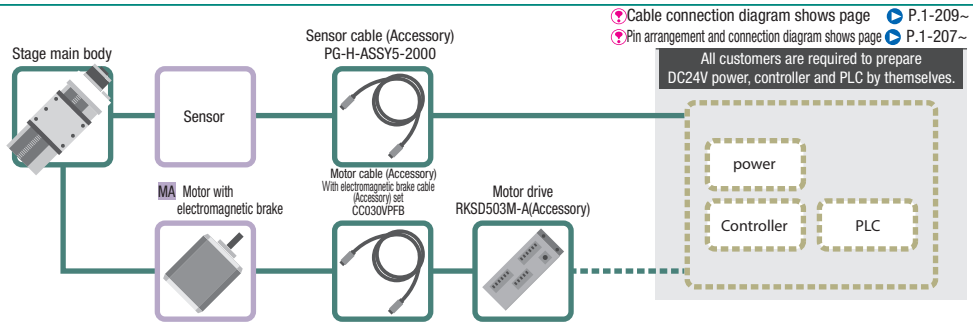

Cable connection diagram shows page P.1-209~
Pin arrangement and connection diagram shows page P.1-207~

Motor option

PA α Step
Motor model
ARM24SAK

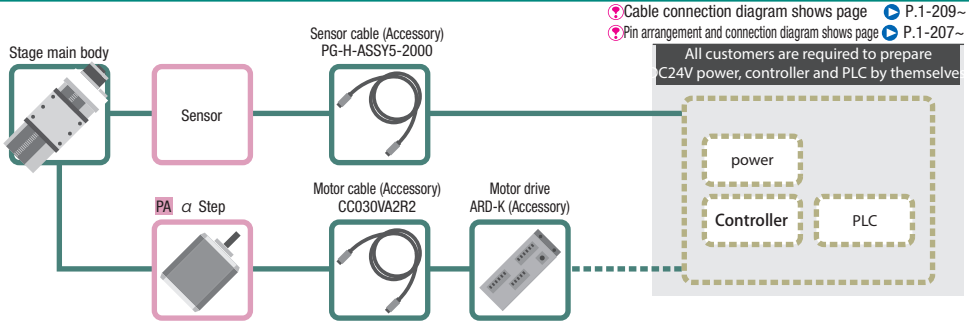

Cable connection diagram shows page P.1-209~
Pin arrangement and connection diagram shows page P.1-207~

Motor option

UA AC servo motor
Motor model
HG-KR053

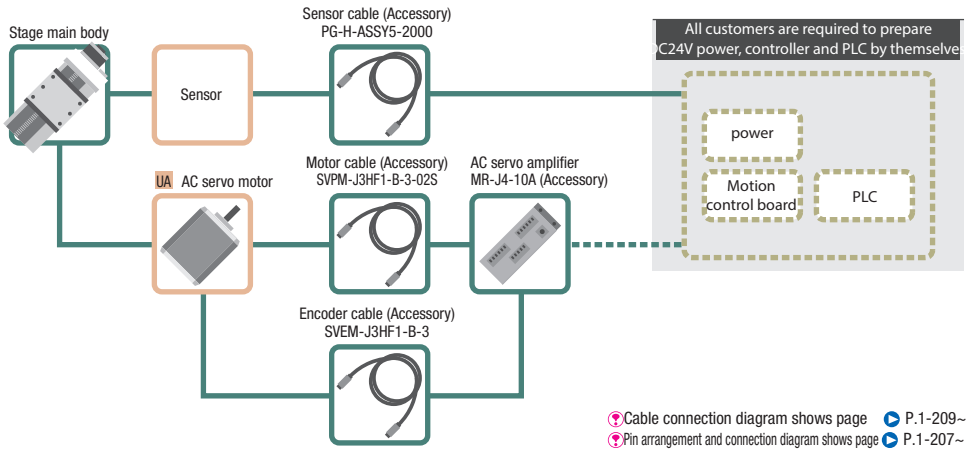

Cable connection diagram shows page P.1-209~
Pin arrangement and connection diagram shows page P.1-207~

Motor code			C	D	E	MA	PA	UA
Feature			Standard	High-torque	High resolution	With electromagnetic brake	Small step-out	High speed
Type			5 phase stepping motor 0.75A/Phase			5 phase 0.35A/Phase	α step motor	AC servo motor
Model*			**PK523HPB-C15**	**PK525HPB**	**PK523HPMB**	**PKE545MC-A1**	**ARM24SAK**	**HG-KR053**
Resolution	Lead 1mm	Full/Half	2μm/1μm		1μm/0.5μm	2μm/1μm	1μm (Set to 1000P/R)	22 bits encoder (4194304P/R)
		Micro step (1/20 split)	0.1μm		0.05μm	0.1μm	–	
MAX speed	Lead 1mm		10mm/sec	30mm/sec	25mm/sec	20mm/sec	35mm/sec	50mm/sec

* Model is our own management model.

X-axis Linear Ball Guide : PG430/PG530/PG650/PG750

PG650-L

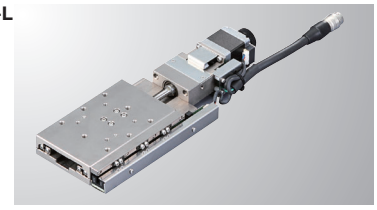

PG650-R

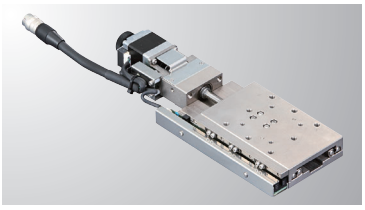

Dimensional outline drawings

PG430-L

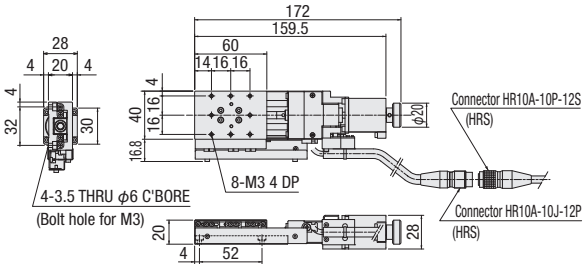

PG430-R

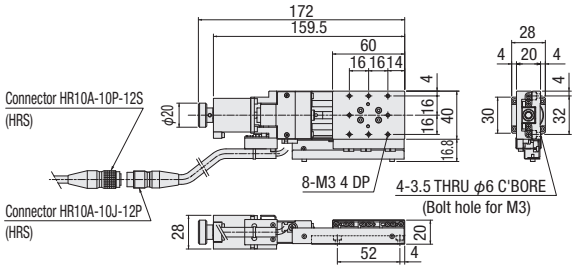

PG530-L

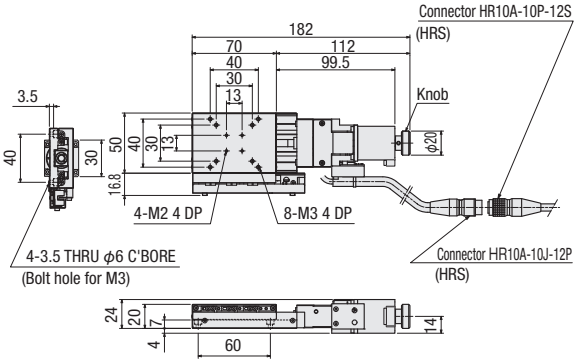

PG530-R

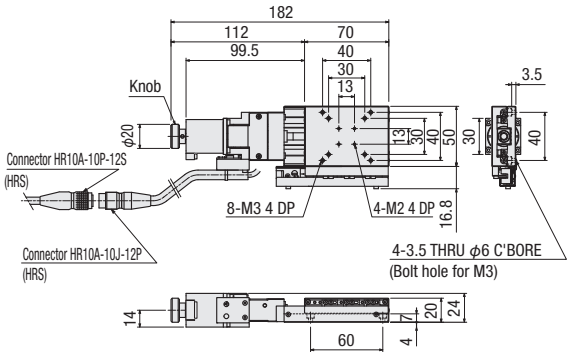

PG650-L

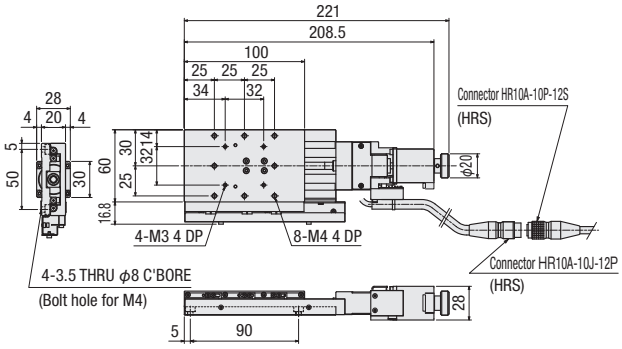

PG650-R

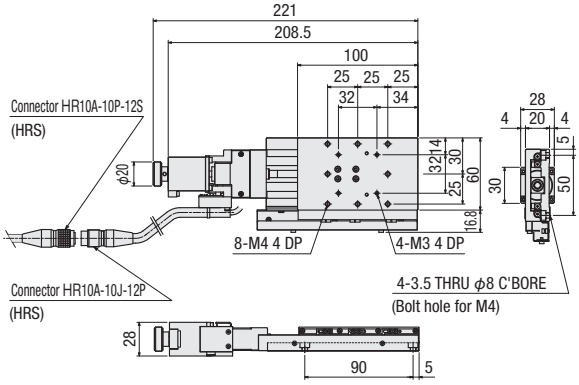

PG750-L

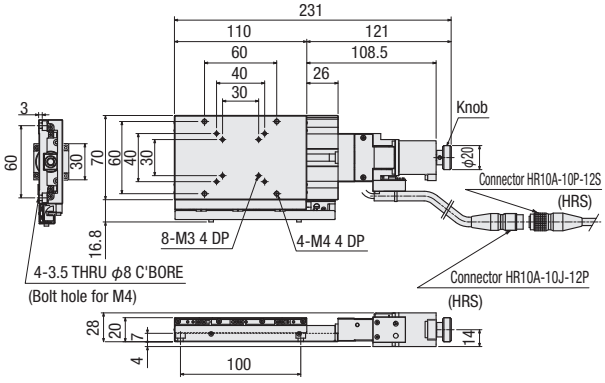

PG750-R

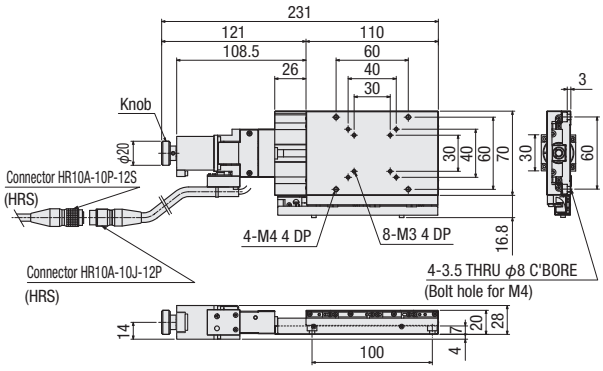

PART COMMUNITY CAD DATA
SURUGA SEIKI CAD 3D·2D

Dimensional outline drawings

C Standard motor

Motor model PK525HPB-C15

D High-torque

Motor model PK525HPB

E High resolution

Motor model PK523HPMB

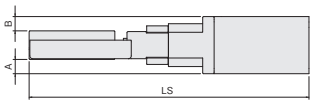

Model	C(Standard) /D (High-torque) /E (High resolution) Common			C (Standard)	D (High-torque)	E (High resolution)
	Motor size	A	B	LS		
PG430-∗∗∗∗-□	□28	4	4	172	191.5	172
PG530-∗∗∗∗-□				182	201.5	182
PG650-∗∗∗∗-□				221	240.5	221
PG750-∗∗∗∗-□				231	250.5	231

MA With electromagnetic brake

Motor model PKE545MC-A1

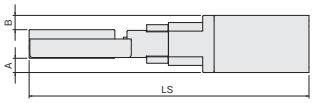

Model	MA (With electromagnetic brake)			C (Standard)
	Motor size	A	B	LS
PG430-∗∗∗∗-MA	□42	11	11	208.5	172
PG530-∗∗∗∗-MA				218.5	182
PG650-∗∗∗∗-MA				257.5	221
PG750-∗∗∗∗-MA				267.5	231

PA α step

Motor model ARM24SAK

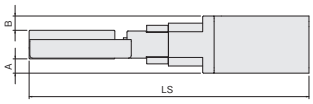

Model	PA (α step)			C(Standard)
	Motor size	A	B	LS
PG430-∗∗∗∗-PA	□28	4	4	172.5	172
PG530-∗∗∗∗-PA				182.5	182
PG650-∗∗∗∗-PA				221.5	221
PG750-∗∗∗∗-PA				231.5	231

UA AC servo motor

Motor model HG-KR053

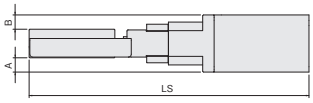

Model	UA (AC servo motor)			C (Standard)
	Motor size	A	B	LS
PG430-∗∗∗∗-UA	□40	10.7	10.5	204.4	172
PG530-∗∗∗∗-UA				214.4	182
PG650-∗∗∗∗-UA				253.4	221
PG750-∗∗∗∗-UA				263.4	231

XY-axis Linear Ball Guide: PMG413/PMG513/PMG615/PMG715

PMG615-L

PMG615-R

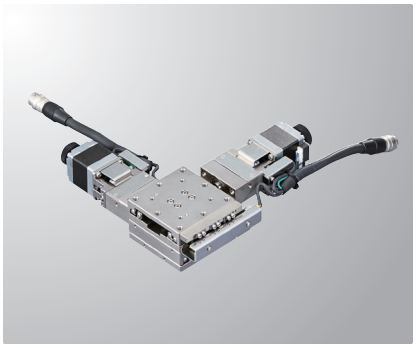

RoHS

※A dedicated hex wrench for fixing bottom axis of XY is attached.

Model / Selection code / Option code

PMG 413-L05AL-C 5

1 2 3 4 5 6 7 8

Cable P.1-207～
Electrical specification P.1-037～

1 Table size

4	□40mm
5	□50mm
6	□60mm
7	□70mm

2 Travel length

13	13mm
15	15mm

* Cannot choose 415, 515, 613, 713 in combination with 1 and 2.

3 6 Identification mark

L	Sensor cover position is R for X and Y-axis. 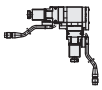
R	Sensor cover position is L for X and Y-axis. 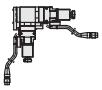

* 3 and 6 are linked. Cannot choose L and R at the same time.

4 Sensor voltage

05	5V
24	24V

* 05 [5V] for standard

5 Sensor logic

A	N.C.
B	N.O.
C	Limit sensor is N.C.. ORG1 and ORG2 are N.O.

* The sensor voltage/logic is different, but the external form dimention is the same.
* If you choose 24V, not available our controller DS102/112.

7 Motor option

Code	Specification
C	Standard
D	High-torque
E	High resolution
MA	With electromagnetic brake (Driver set)
PA	α Step (Driver set)
UA	Servo motor (Amplifier set)

* Code MA · PA · UA is the set of driver and cable.
* See page P.1-037~ for details of motor option.

8 Cable option

※See page P.1-039~ for ORG2 compatible cable.

Code	Specification	Cable type
Blank	2m	D214-2-2E
1	2m One end loose	D214-2-2EK
2	4m	D214-2-4E
3	4m One end loose	D214-2-4EK
4	Only connector (Cable is not included)	—
5	Cable is not included (Standard)	—
6	Robot cable 2m	D214-2-2R
7	Robot cable 4m	D214-2-4R
8	Robot cable 4m one end loose	D214-2-4RK
9	Robot cable 2m one end loose	D214-2-2RK
M	Cable for electromagnetic brake	—
P	Cable for α step	
U	Cable for servo motor	

* One end loose position to only stage opposite side.
* The price includes M, P and U.
  Not available non-cable.
  See page P.1-207,209~ for details of cable.
  Please select "blank, 2, 6 and 7" when connect with stepping motor controller(DS102/112).

[Note]
Please check available cable from compatibility list.

	Motor code	Cable code
Motor/cable products list	C, D, E	Blank, 1～9
	MA	M
	PA	P
	UA	U

SPEC

Model		PMG413-L05AL-C5	PMG513-L05AL-C5	PMG615-L05AL-C5	PMG715-L05AL-C5
(Opposite hand)		PMG413-R05AR-C5	PMG513-R05AR-C5	PMG615-R05AR-C5	PMG715-R05AR-C5
Mechanical specification	Travel length	13mm		15mm	
	Table size	40×40mm	50×50mm	60×60mm	70×70mm
	Feed screw (Ball screw)	ϕ6 lead 1			
	Guide	Linear ball guide			
	Main materials-Finishing	Stainless–Opposite side of the end face finishing			
	Weight	1.0kg	1.2kg	1.7kg	1.8kg
Accuracy specification	Resolution (Pulse)	2μm (Full)/1μm (Half)			
	MAX speed	10mm/sec			
	Load capacity	9.5kgf [93.1N]	9.4kgf [92.1N]	9.3kgf [91.1N]	9.1kgf [89.2N]
	Perpendicularity	Within 5μm/Full stroke			
Sensor	Limit sensor	Installed			
	Origin sensor (ORG1)	Installed			
	Slit origin sensor (ORG2)	Installed Refer page P.1-039~			
Provided screw (Hexagon-headed bolt)		4 of M3－8		4 of M4－8	

Single axis accuracy specification	Uni-directional positioning accuracy	Within 6μm
	Repeatability positioning accuracy	Within ±0.5μm
	Lost motion	Within 1μm
	Backlash	Within 0.5μm
	Straightness	Within 1μm
	Pitching/Yawing	Within 15″/Within 10″

※ Might be changed specification due to motors P.1-213～.

PART COMMUNITY CAD DATA SURUGA SEIKI CAD 3D·2D

Dimensional outline drawings

PMG413-L

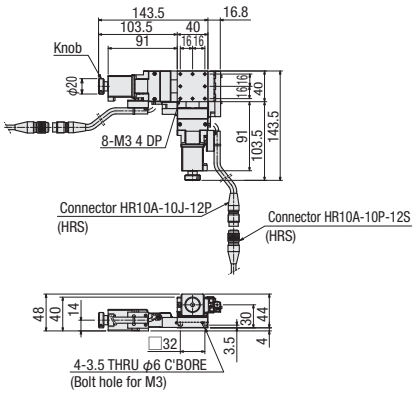

PMG413-R

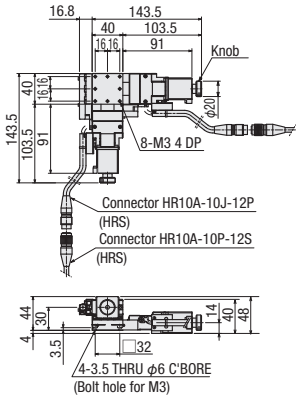

PMG513-L

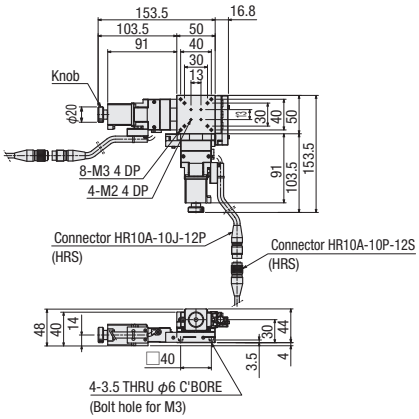

PMG513-R

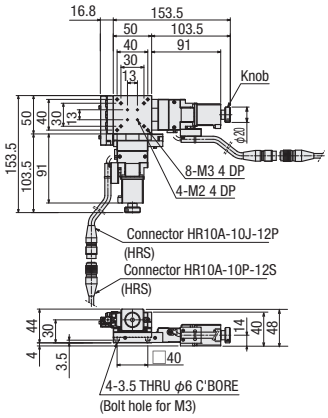

PMG615-L

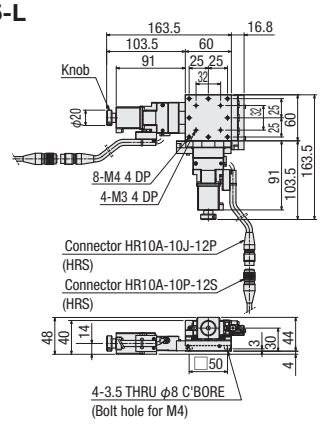

PMG615-R

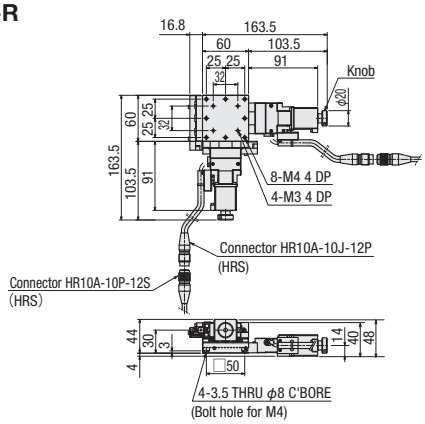

PMG715-L

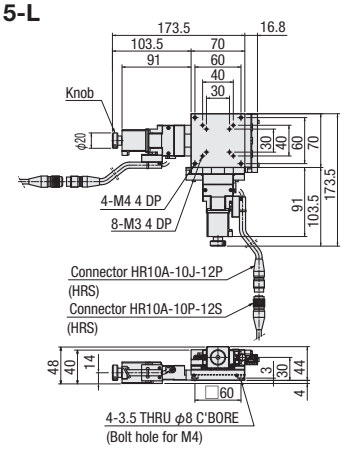

PMG715-R

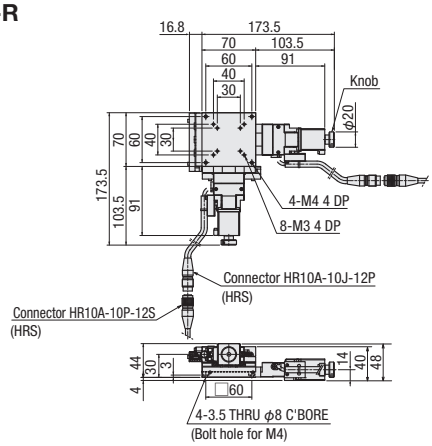

XY-axis Linear Ball Guide: PMG430/PMG530/PMG650/PMG750

PMG650-L

PMG650-R

RoHS

※A dedicated hex wrench for fixing bottom axis of XY is attached.

Model / Selection code / Option code

PMG 430-L05AL-C 5

1 2 3 4 5 6 7 8

Cable P.1-207～
Electrical specification P.1-037～

1 Table size

4	40×60mm
5	50×70mm
6	60×100mm
7	70×110mm

2 Travel length

30	30mm
50	50mm

* Cannot choose 450, 550, 630, 730 in combination with 1 and 2.

3 6 Identification mark

L	Sensor cover position is R for X and Y-axis. 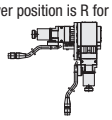
R	Sensor cover position is L for X and Y-axis. 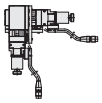

* 3 and 6 are linked. Cannot choose L and R at the same time.

4 Sensor voltage

05	5V
24	24V

* 05 [5V] for standard

5 Sensor logic

A	N.C.
B	N.O.
C	Limit sensor is N.C.. ORG1 and ORG2 are N.O.

* The sensor voltage/logic is different, but the external form dimention is the same.
* If you choose 24V, not available our controller DS102/112.

7 Motor option

Code	Specification
C	Standard
D	High-torque
E	High resolution
MA	With electromagnetic brake (Driver set)
PA	α Step (Driver set)
UA	Servo motor (Amplifier set)

* Code MA · PA · UA is the set of driver and cable.
* See page P.1-037~ for details of motor option.

8 Cable option

※See page P.1-039~ for ORG2 compatible cable.

Code	Specification	Cable type
Blank	2m	D214-2-2E
1	2m One end loose	D214-2-2EK
2	4m	D214-2-4E
3	4m One end loose	D214-2-4EK
4	Only connector (Cable is not included)	—
5	Cable is not included (Standard)	—
6	Robot cable 2m	D214-2-2R
7	Robot cable 4m	D214-2-4R
8	Robot cable 4m one end loose	D214-2-4RK
9	Robot cable 2m one end loose	D214-2-2RK
M	Cable for electromagnetic brake	—
P	Cable for α step	
U	Cable for servo motor	

* One end loose position to only stage opposite side.
* The price includes M, P and U.
  Not available non-cable.
  See page P.1-207,209~ for details of cable.
  Please select "blank, 2, 6 and 7" when connect with stepping motor controller(DS102/112).

[Note]
Please check available cable from compatibility list.

	Motor code	Cable code
Motor/cable products list	C, D, E	Blank, 1～9
	MA	M
	PA	P
	UA	U

SPEC

Model	PMG430-L05AL-C5	PMG530-L05AL-C5	PMG650-L05AL-C5	PMG750-L05AL-C5
(Opposite hand)	PMG430-R05AR-C5	PMG530-R05AR-C5	PMG650-R05AR-C5	PMG750-R05AR-C5
Mechanical specification: Travel length	30mm		50mm	
Table size	40×60mm	50×70mm	60×100mm	70×110mm
Feed screw (Ball screw)	φ6 lead 1			
Guide	Linear ball guide			
Main materials-Finishing	Stainless–Opposite side of the end face finishing			
Weight	1.40kg	1.70kg	2.46kg	2.72kg
Accuracy specification: Resolution (Pulse)	2μm (Full)/1μm (Half)			
MAX speed	10mm/sec			
Load capacity	9.24kgf [90.5N]	9.04kgf [88.5N]	8.62kgf [84.4N]	8.44kgf [82.7N]
Perpendicularity	Within 10μm/Full stroke			
Sensor: Limit sensor	Installed			
Origin sensor (ORG1)	Installed			
Slit origin sensor (ORG2)	Installed Refer page P.1-039~			
Provided screw (Hexagon-headed bolt)	4 of M3—8		4 of M4—8	

Single axis accuracy specification	Uni-directional positioning accuracy	Within 12μm
	Repeatability positioning accuracy	Within ±0.5μm
	Lost motion	Within 1μm
	Backlash	Within 0.5μm
	Straightness	Within 2μm
	Pitching/Yawing	Within 20″/Within 15″

Note：PMG430,530,650,750 includes spacer for XY mouting.
※ Might be changed specification due to motors P.1-213～.

CAD PART COMMUNITY CAD DATA SURUGA SEIKI CAD 3D·2D

Dimensional outline drawings

PMG430-L

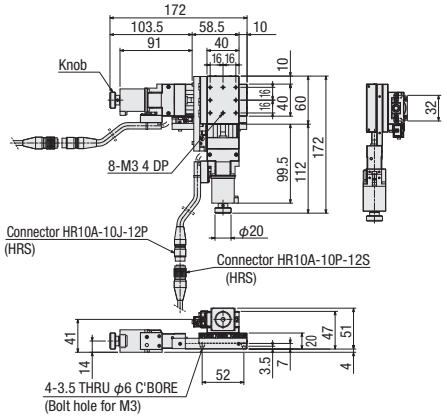

PMG430-R

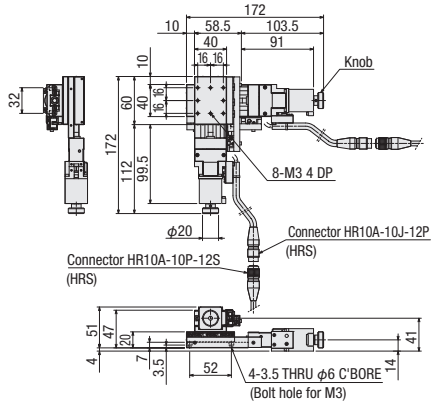

PMG530-L

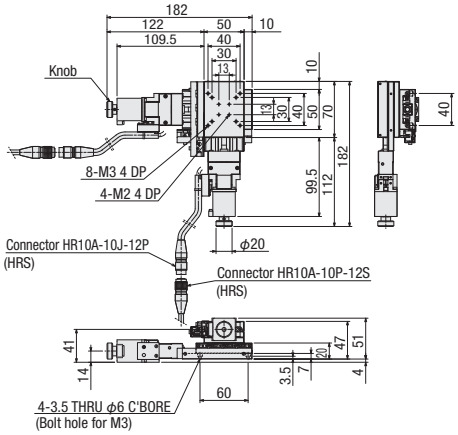

PMG530-R

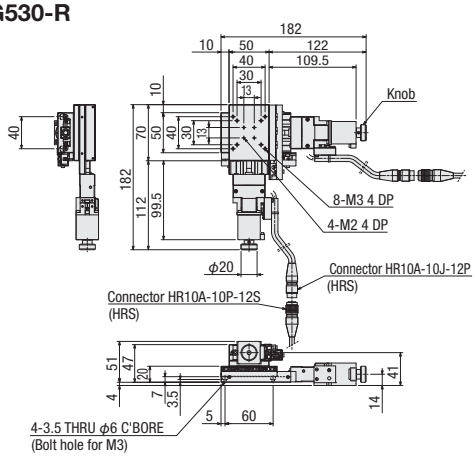

PMG650-L

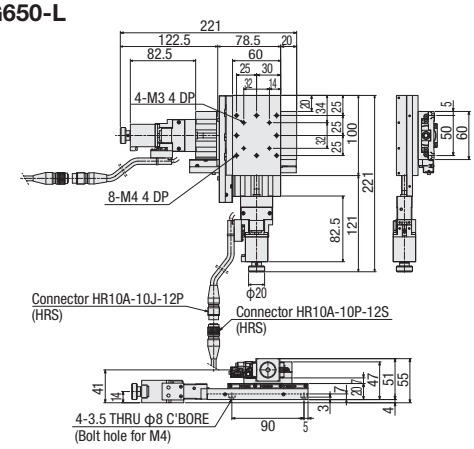

PMG650-R

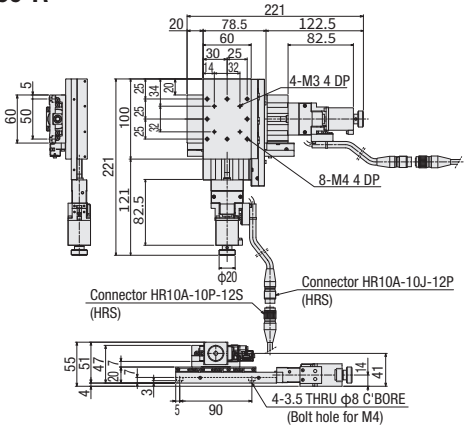

PMG750-L

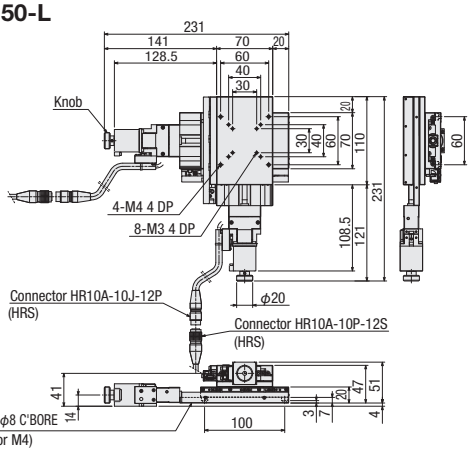

PMG750-R

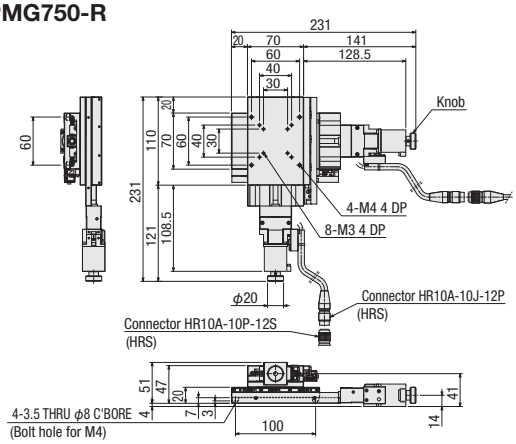

Z-axis Linear Ball Guide: PZG413/PZG513/PZG615/PZG715

PZG615-L

PZG615-R

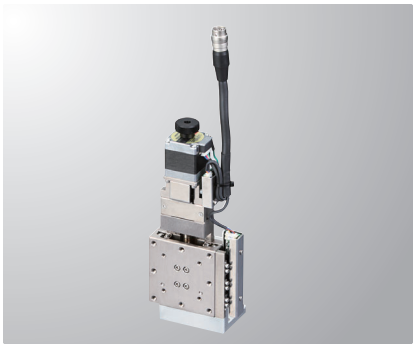

RoHS

Model | Selection code | Option code

PZG413-L05AG-C5

1 2 3 4 5 6 7

Cable P.1-207～
Electrical specification P.1-037～

1 Table size

4	□40mm
5	□50mm
6	□60mm
7	□70mm

2 Travel length

13	13mm
15	15mm

* Cannot choose 415, 515, 613, 713 in combination with 1 and 2.

3 Sensor cover location

L	L position
R	Opposite hand

4 Sensor voltage

05	5V
24	24V

* 05 [5V] for standard

5 Sensor logic

A	N.C.
B	N.O.
C	Limit sensor is N.C.. ORG1 and ORG2 are N.O.

* The sensor voltage/logic is different, but the external form dimention is the same.
* If you choose 24V, not available our controller DS102/112.

6 Motor option

Code	Specification
C	Standard
D	High-torque
E	High resolution
MA	With electromagnetic brake (Driver set)
PA	α Step (Driver set)
UA	Servo motor (Amplifier set)

* Code MA · PA · UA is the set of driver and cable.
* See page P.1-037~ for details of motor option. [M/P]; Please see our web site for more details about motors.

7 Cable option

※See page P.1-039~ for ORG2 compatible cable.

Code	Specification	Cable type
Blank	2m	D214-2-2E
1	2m One end loose	D214-2-2EK
2	4m	D214-2-4E
3	4m One end loose	D214-2-4EK
4	Only connector (Cable is not included)	—
5	Cable is not included (Standard)	—
6	Robot cable 2m	D214-2-2R
7	Robot cable 4m	D214-2-4R
8	Robot cable 4m one end loose	D214-2-4RK
9	Robot cable 2m one end loose	D214-2-2RK
M	Cable for electromagnetic brake	—
P	Cable for α step	
U	Cable for servo motor	

* One end loose position to only stage opposite side.
* The price includes M, P and U.
  Not available non-cable.
  See page P.1-207,209~ for details of cable.
  Please select "blank, 2, 6 and 7" when connect with stepping motor controller(DS102/112).

[Note]
Please check available cable from compatibility list.

	Motor code	Cable code
Motor/cable products list	C, D, E	Blank, 1～9
	MA	M
	PA	P
	UA	U

SPEC

Model	PZG413-L05AG-C5	PZG513-L05AG-C5	PZG615-L05AG-C5	PZG715-L05AG-C5
(Opposite hand)	PZG413-R05AG-C5	PZG513-R05AG-C5	PZG615-R05AG-C5	PZG715-R05AG-C5
Mechanical specification: Travel length	13mm		15mm	
Mechanical specification: Table size	40×40mm	50×50mm	60×60mm	70×70mm
Mechanical specification: Feed screw (Ball screw)	ϕ6 lead 1			
Mechanical specification: Guide	Linear ball guide			
Mechanical specification: Main materials-Finishing	Stainless–Opposite side of the end face finishing			
Mechanical specification: Weight	0.6kg	0.8kg	0.9kg	1.2kg
Accuracy specification: Resolution (Pulse)	2μm (Full)/1μm (Half)			
Accuracy specification: MAX speed	10mm/sec			
Accuracy specification: Load capacity (Excitation)	5kgf [49N]			
Sensor: Limit sensor	Installed			
Sensor: Origin sensor (ORG1)	Installed			
Sensor: Slit origin sensor (ORG2)	Installed Refer page P.1-039~			
Provided screw (Hexagon-headed bolt)	4 of M3—10		4 of M4—12	4 of M3—12

Single axis accuracy specification	Uni-directional positioning accuracy	Within 6μm
	Repeatability positioning accuracy	Within ±0.5μm
	Lost motion	Within 1μm
	Backlash	Within 0.5μm
	Straightness	Within 1μm
	Pitching/Yawing	Within 15″/Within 10″

※ Might be changed specification due to motors. See page P.1-213~ for details.

PART COMMUNITY CAD DATA SURUGA SEIKI CAD 3D·2D

Dimensional outline drawings

PZG413-L

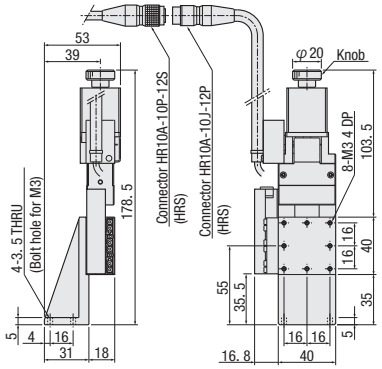

PZG413-R

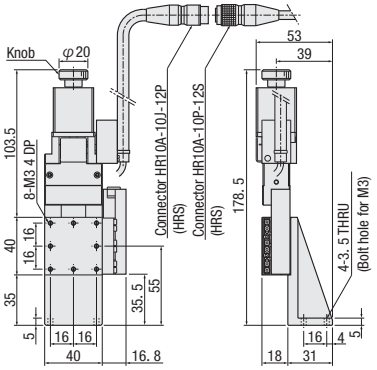

PZG513-L

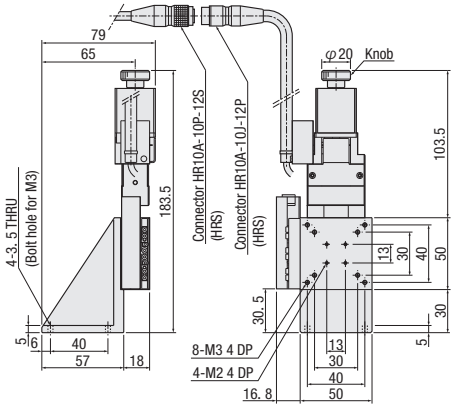

PZG513-R

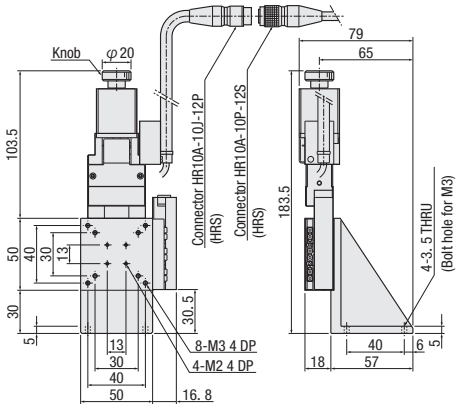

PZG615-L

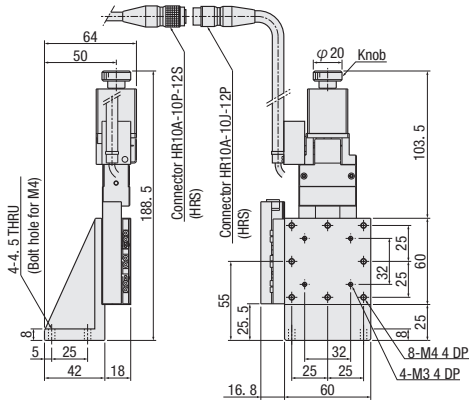

PZG615-R

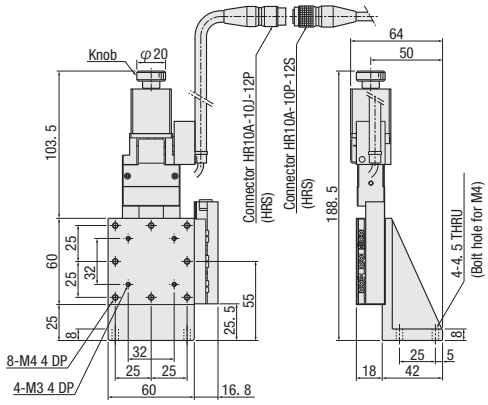

PZG715-L

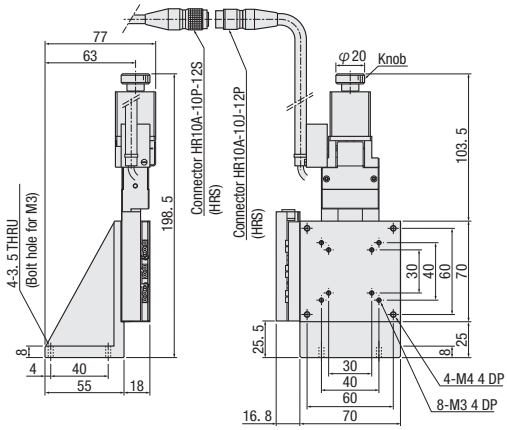

PZG715-R

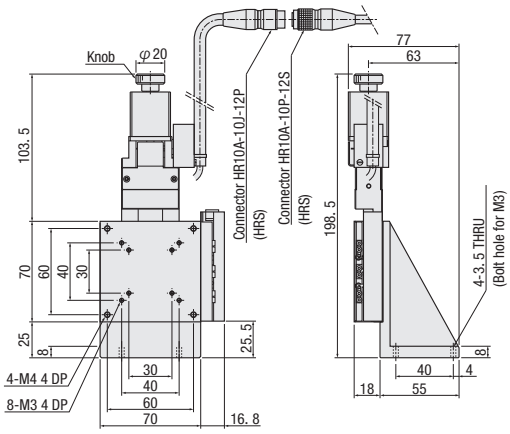

XYZ-axis Linear Ball Guide: PMZG413/PMZG513/PMZG615/PMZG715

PMZG615-L

PMZG615-R

RoHS

※A dedicated hex wrench for fixing bottom axis of XY is attached.

Model / Selection code / Option code

PMZG 413-L05AG-C 5

1 2 3 4 5 6 7

Cable P.1-207～
Electrical specification P.1-037～

1 Table size

4	□40mm
5	□50mm
6	□60mm
7	□70mm

2 Travel length

13	13mm
15	15mm

* Cannot choose 415, 515, 613, 713 in combination with 1 and 2.

3 Sensor cover location specification

L	X-axis L, Y-axis R, Z-axis L 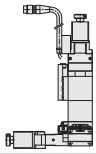
R	X-axis R, Y-axis L, Z-axis R 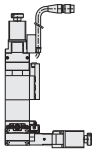

4 Sensor voltage

05	5V
24	24V

* 05 [5V] for standard

5 Sensor logic

A	N.C.
B	N.O.
C	Limit sensor is N.C.. ORG1 and ORG2 are N.O.

* The sensor voltage/logic is different, but the external form dimention is the same.
* If you choose 24V, not available our controller DS102/112.

6 Motor option

Code	Specification
C	Standard
D	High-torque
E	High resolution
MA	With electromagnetic brake (Driver set)
PA	α Step (Driver set)
UA	Servo motor (Amplifier set)

* Code MA · PA · UA is the set of driver and cable.
* See page P.1-037~ for details of motor option.

7 Cable option

※See page P.1-039~ for ORG2 compatible cable.

Code	Specification	Cable type
Blank	2m	D214-2-2E
1	2m One end loose	D214-2-2EK
2	4m	D214-2-4E
3	4m One end loose	D214-2-4EK
4	Only connector (Cable is not included)	—
5	Cable is not included (Standard)	—
6	Robot cable 2m	D214-2-2R
7	Robot cable 4m	D214-2-4R
8	Robot cable 4m one end loose	D214-2-4RK
9	Robot cable 2m one end loose	D214-2-2RK
M	Cable for electromagnetic brake	—
P	Cable for α step	
U	Cable for servo motor	

* One end loose position to only stage opposite side.
* The price includes M, P and U.
  Not available non-cable.
  See page P.1-207,209~ for details of cable.
  Please select "blank, 2, 6 and 7" when connect with stepping motor controller(DS102/112).

[Note]
Please check available cable from compatibility list.

	Motor code	Cable code
Motor/cable products list	C, D, E	Blank, 1～9
	MA	M
	PA	P
	UA	U

SPEC

Model	PMZG413-L05AG-C5	PMZG513-L05AG-C5	PMZG615-L05AG-C5	PMZG715-L05AG-C5
(Opposite hand)	PMZG413-R05AG-C5	PMZG513-R05AG-C5	PMZG615-R05AG-C5	PMZG715-R05AG-C5
Mechanical specification: Travel length	13mm		15mm	
Mechanical specification: Table size	40×40mm	50×50mm	60×60mm	70×70mm
Mechanical specification: Feed screw (Ball screw)	ϕ6 lead 1			
Mechanical specification: Guide	Linear ball guide			
Mechanical specification: Main materials-Finishing	Stainless–Opposite side of the end face finishing			
Mechanical specification: Weight	1.6kg	2.0kg	2.6kg	3.0kg
Accuracy specification: Resolution (Pulse)	2μm (Full)/1μm (Half)			
Accuracy specification: MAX speed	10mm/sec			
Accuracy specification: Load capacity (Excitation)	5kgf [49N]			
Accuracy specification: Perpendicularity	Within 5μm/Full stroke (XY-axis)			
Sensor: Limit sensor	Installed			
Sensor: Origin sensor (ORG1)	Installed			
Sensor: Slit origin sensor (ORG2)	Installed Refer page P.1-039~			
Provided screw (Hexagon-headed bolt)	4 of M3—8		4 of M4—8	

Single axis accuracy specification	Uni-directional positioning accuracy	Within 6μm
	Repeatability positioning accuracy	Within ±0.5μm
	Lost motion	Within 1μm
	Backlash	Within 0.5μm
	Straightness	1μm
	Pitching/Yawing	Within 15″/Within 10″

※ Might be changed specification due to motors. See page P.1-213~ for details.

CAD PART COMMUNITY CAD DATA SURUGA SEIKI CAD 3D·2D

Dimensional outline drawings

PMZG413-L

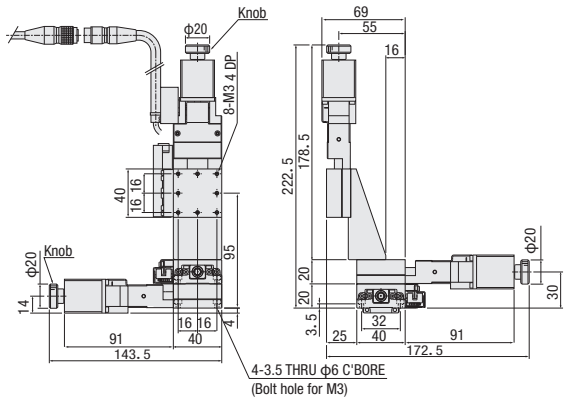

PMZG413-R

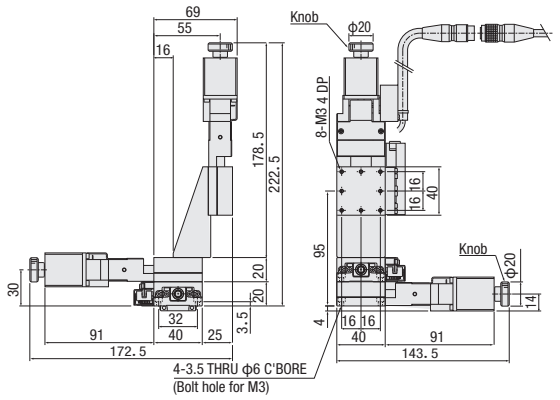

PMZG513-L

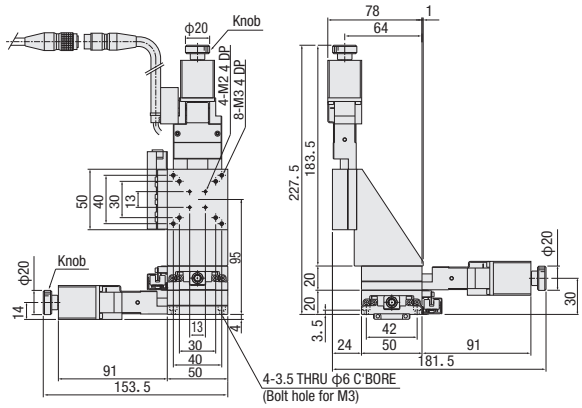

PMZG513-R

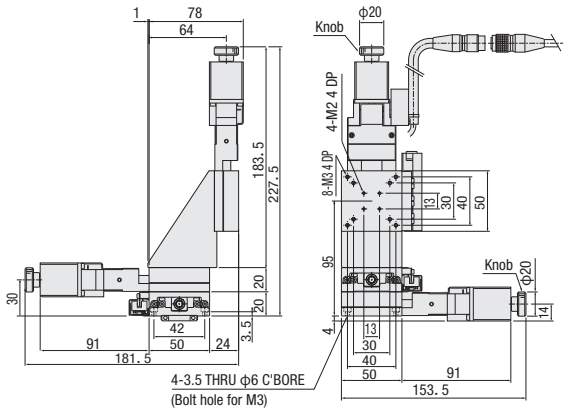

PMZG615-L

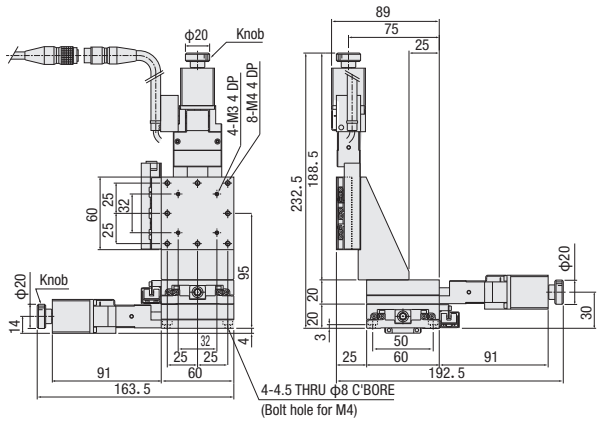

PMZG615-R

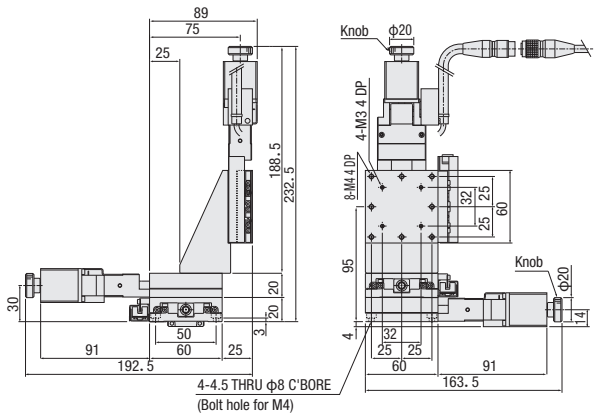

PMZG715-L

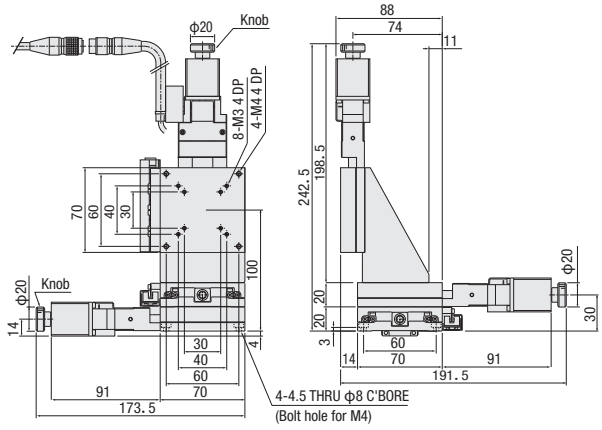

PMZG715-R

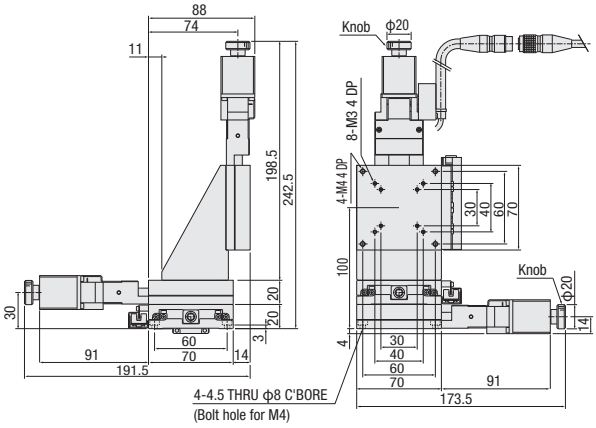

Electrical Specification: PG Series

Motor・Electrical specification

Motor code			C	D	E	MA	PA	UA
Models			PG413-****-C PG513-****-C PG615-****-C PG715-****-C PG430-****-C PG530-****-C PG650-****-C PG750-****-C	PG413-****-D PG513-****-D PG615-****-D PG715-****-D PG430-****-D PG530-****-D PG650-****-D PG750-****-D	PG413-****-E PG513-****-E PG615-****-E PG715-****-E PG430-****-E PG530-****-E PG650-****-E PG750-****-E	PG413-****-MA PG513-****-MA PG615-****-MA PG715-****-MA PG430-****-MA PG530-****-MA PG650-****-MA PG750-****-MA	PG413-****-PA PG513-****-PA PG615-****-PA PG715-****-PA PG430-****-PA PG530-****-PA PG650-****-PA PG750-****-PA	PG413-***-UA PG513-***-UA PG615-***-UA PG715-***-UA PG430-***-UA PG530-***-UA PG650-***-UA PG750-***-UA
MotorSpecification (*1)	Type		5 phase stepping motor 0.75A/Phase			5 phase 0.35A/Phase	α step motor	AC servo motor
	Feature		Standard	High-torque	High resolution	With electromagnetic brake	Small step-out	High speed
	Model (*2)		PK523HPB-C15	PK525HPB	PK523HPMB	PKE545MC-A1	ARM24SAK	HG-KR053
	Electromagnetic brake		–			Installed	–	
	Maker		Oriental Motor Co., Ltd.					Mitsubishi Electric corporation
	Step angle (Position detector)		0.72°		0.36°	0.72°	0.36° (Set to 1000P/R)	22 bits encoder (4194304P/R)
	Mass		0.1kg	0.2kg	0.11kg	0.52kg	0.15kg	0.34kg
	Motor size	□size	28mm			42mm	28mm	40mm
		L size	42mm	61.5mm	42mm	69mm	45mm	66.4mm
	Excitation (moment) maximum torque		0.033N・m	0.073N・m	0.038N・m	0.240N・m	0.055N・m	0.56N・m
	Driver type		▶P.1-205～			RKSD503M-A	ARD-K	MR-J4-10A
	Input power (Voltage・frequency)					Single phase AC100-120V 50/60Hz	DC24V±10%	Three and single phase AC200-240V 50/60Hz
Sensor	Limit sensor		Installed					
	Origin sensor (ORG1)		Installed					
	Slit origin sensor (ORG2)		Installed				–	
	Model		Photo microsensor EE-SX384,EE-SX484 (Omron Co., Ltd.) (Slit origin sensor will be PM-L25(Panasonic Industrial Devices SUNX) in code M)					
	Power voltage		DC5V±5% (DC24V±10% Option) (PM-L25 power voltage: DC5~24V±10%)					
	Consumption current		Total 100mA or less (25mA per 1 sensor) (PM-L25 consumption current: 15mA or less)					
	Control output		EE-SX384/EE-SX484: NPN open collector output DC5~24V 16mA or less Residual voltage 0.4V or less when the load current is 16mA PM-L25: NPN open collector output DC30V or less50mA or less Residual voltage 2V or less when the load current is 50mA Residual voltage 1V or less when the load current is 16mA					
	Output logic		EE-SX384: Output transistor is ON at the light sheild (continuity) EE-SX484: Output transistor is OFF at the light sheild (Non-continuity) PM-L25: Output transistor is OFF at the light sheild (Non-continuity)					
Connector	Motor	Model	HR10A-10J-12P (73) (Hirose Electric Co., Ltd.)			motor side: 5557-06R-210 electromagnetic brake side: 5557-02R-210(MOLEX)	43020-1000 (Japan Molex)	Motor cable: – / Encoder: –
		Receiving connector	HR10A-10P-12S (73) (Hirose Electric Co., Ltd.)			motor side: 5559-06P-210 electromagnetic brake side: 5559-02P-210(MOLEX)	43020-1000 (Japan Molex)	Motor cable: JN4FT04SJ1-R (JAE) Encoder: 1674320-1 (Tyco Electronics Japan G.K.)
	Sensor	Model: Limit sensor, Origin sensor (ORG1), Slit origin sensor (ORG2)	HR10A-10J-12P (73) (Hirose Electric Co., Ltd.)			S5B-ZR-SM4-TF (LF) (SN) (JST Co., Ltd.)		
						PM-L25 Loose wire	–	
		Receiving connector: Limit sensor, Origin sensor (ORG1), Slit origin sensor (ORG2)	HR10A-10P-12S (73) (Hirose Electric Co., Ltd.)			ZHR-5 (JST Co., Ltd.)		
						–		
Accuracy specification	Resolution: Lead 1mm	Full/Half	2μm/1μm		1μm/0.5μm	2μm/1μm	1μm/0.5μm	22 bits encoder (4194304P/R)
		Micro step (1/20 split)	0.1μm		0.05μm	0.1μm	–	
	MAX speed Lead 1mm		10mm/sec	30mm/sec	25mm/sec	20mm/sec	35mm/sec	50mm/sec

* 1 See page ▶P.1-213~ for details of single motor specification.
* 2 Model is our own management model.
* The electric specification of XY (PMG), Z (PZG), XYZ (PMZG) are the same.
[M/P]; Please see our web site for more details about motors.

Dimensional outline drawings

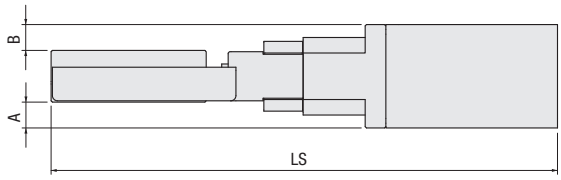

Motor code	Size □[mm]	A	B	LS							
				PG413	PG513	PG615	PG715	PG430	PG530	PG650	PG750
C	28	4	4	143.5	153.5	163.5	173.5	172	182	221	231
D	28	4	4	163	173	183	193	191.5	201.5	240.5	250.5
E	28	4	4	143.5	153.5	163.5	173.5	172	182	221	231
MA	42	11	11	180	190	200	210	208.5	218.5	257.5	267.5
PA	28	4	4	144	154	164	174	172.5	182.5	221.5	231.5
UA	40	10.7	10.5	175.9	185.9	195.9	205.9	204.4	214.4	253.4	263.4

Pin allocation・Connection diagram

Motor code	Pin allocation・Connection diagram (Motor)	Pin allocation・Connection diagram (Sensor)

C・D・E

[Motor and sensor pin allocation (the same)]

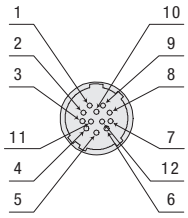

[Motor and sensor connection diagram (the same)]

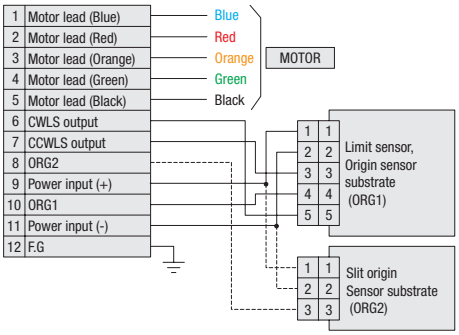

(Usage sensor for each logis)

Sensor logic	CWLS,CCWLS	ORG1	ORG2
A	EE-SX484		EE-SX384
B	EE-SX384		EE-SX484
C	EE-SX484	EE-SX384	EE-SX484

* Please select the cable from the option code.
※See page ▶ P.1-211 for details of cable.

MA

Cable for motor（3m）

・motor side

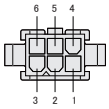

5559-06P-210（MOLEX）

・driver side

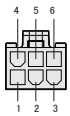

5557-06R-210（MOLEX）

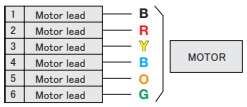

Electromagnetic brake cable（3m）

・motor side

5559-02P-210（MOLEX）

※Cable model:CC030VPFB See page ▶ P.1-211 for details.

[Connector diagram (sensor)]

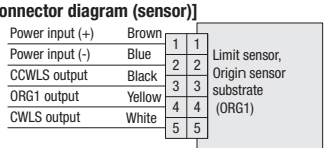

※Attached sensor cable model:PG-H-ASSY5-2000
See page ▶ P.1-212 for details.

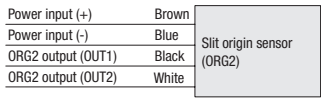

※See page ▶ P.1-212 for details of slit origin sensor PM-L25

PA

Cable for motor（3m）

・motor side

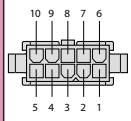

43020-1000（MOLEX）

・driver side

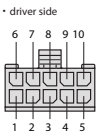

43025-1000（MOLEX）

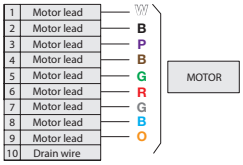

Motor cable model:CC030VA2R2 See page ▶ P.1-211 for details.

[Connector diagram (sensor)]

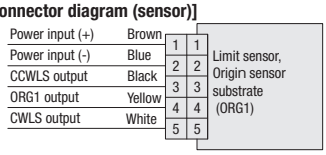

※Sensor cable model:PG-H-ASSY5-2000
See page ▶ P.1-212 for details.

UA

Motor cable model:SVPM-J3HF1-B-3-02S See page ▶ P.1-211 for details.

encoder model:SVEM-J3HF1-B-3 See page ▶ P.1-211 for details.

Cable type

Code	Specification	Cable type
Blank	2m	**D214-2-2E**
1	2m One end loose	**D214-2-2EK**
2	4m	**D214-2-4E**
3	4m One end loose	**D214-2-4EK**
6	Robot cable 2m	**D214-2-2R**
7	Robot cable 4m	**D214-2-4R**
8	Robot cable 4m one end loose	**D214-2-4RK**
9	Robot cable 2m one end loose	**D214-2-2RK**

Cable connection diagram shows page ▶ P.1-209~
Great deal purchase both of cable and code.

■Motor code [MA・PA・UA] compatible cable

One set in motor driver and motor cable (encoder).

Motor code	Cable code	Driver type	Motor cable	Encoder cable	Sensor cable
MA	M	RKSD503M-A (Oriental Motor Co.,Ltd.)	CC030VPFB ▶ P.1-211「Motor code MA」	—	PG-H-ASSY5-2000 ▶ P.1-212 Refer the cable connection diagram
PA	P	ARD-K (Oriental Motor Co.,Ltd.)	CC030VA2R2 ▶ P.1-211「Motor code PA」	—	
UA	U	MR-J4-10A (Mitsubishi Electric corporation)	SVPM-J3HF1-B-3-02S ▶ P.1-211「Motor code UA」	SVEM-J3HF1-B-3 ▶ P.1-211「Motor code UA」	

Electrical Specification: PG Series

Timing chart

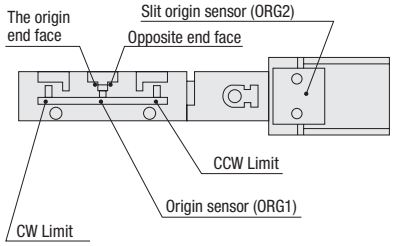

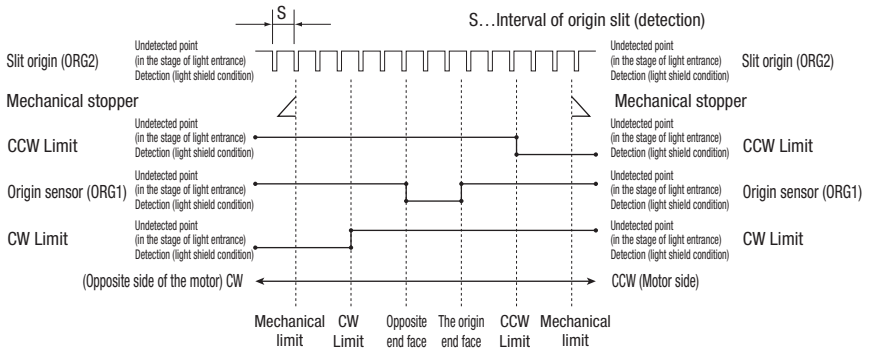

Unit [mm] Direction of CW ◀——▶ Direction of CCW

	Reference coordinate	Mechanical limit	CW Limit	Opposite end face	Origin	Mechanical limit	Mechanical limit
PG413·PG513	Return to origin	8.0	7.5	2	0	6.5	7.0
PG615·PG715	Return to origin	9.0	8.5	2	0	7.5	8.0
PG430·PG530	Return to origin	16.5	16.0	2	0	15.0	15.5
PG650·PG750	Return to origin	26.5	26.0	2	0	25.0	25.5
The same	Detection clearance of slit origin S=1						

* Return to origin means use DS102/DS112 series controller for the return to origin type 3.
* The coordinate value should be on the design flaw. Dimension error may occur about plus or minus 0.5mm.

Built-in sensor

PG series have built-in sensors as below.

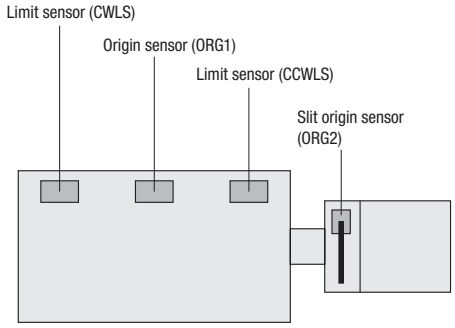

■The connecting diagram that connected to our controller using standard attached cable is shown as below.

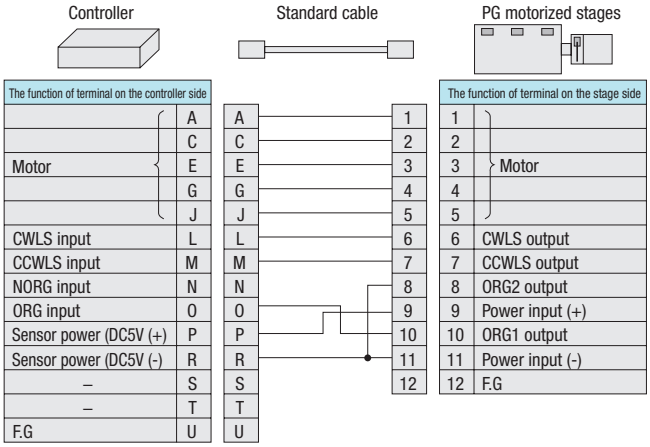

The CWLS(pin#6) and CCWLS(pin#7) on the motorized stage side are connected to CWLS(Lpin) and CCWLS(Mpin) of controller as usual. However ORG2 output (Pin#8) is connected to DC5V(-) and ORG1 output (pin#10) will be connected to ORG. In other words, the sensor of ORG2 does not work on this wire connection, only ORG1 sensor is recognized by the controller as origin signal. As a result, return to origin should be done without the slit origin sensor as same as function of motorized stages that have only three sensors (CWLS, CCWLS and ORG).

●About a correspondence cable for a slit origin sensor (ORG2)! ※See page ▶ P.1-207 for details.

This series are included four sensors as standard. In case of using four sensors with slit origin sensor (ORG2), you need the cable for four sensors. Also please note that the type is different from recommendation return to origin. Should be selected cable code 5 (without cable), and order the cable for four.
When use all of 4 sensors, please select the cable for 4 sensors from page ▶ P.1-207~.

PG series recommendation return to origin method

[Type3] Detect in the direction of CCW and perform detected process for CCW edge (a point) of ORG signal.

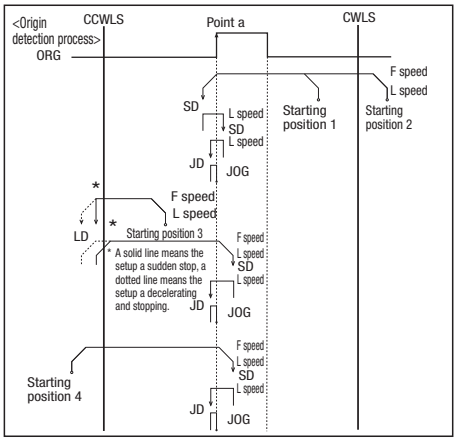

[Type4] Detect in the direction of CW and perform detected process for CW edge of ORG signal.

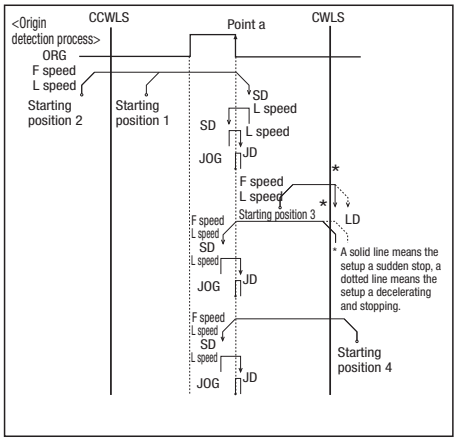

[Type9]
After finished Type3, perform detected process for CCW edge of TIMING signal.

[Type10]
After finished Type4, perform detected process for CW edge of TIMING signal.

●Select return to origin type from the followings when use the slit origin sensor (ORG2).

[Type1] Detect in the direction of CCW and perform detected process for CW edge (point a) of NORG signal.
Next detect an edge of CCW side (point b) of ORG signal.

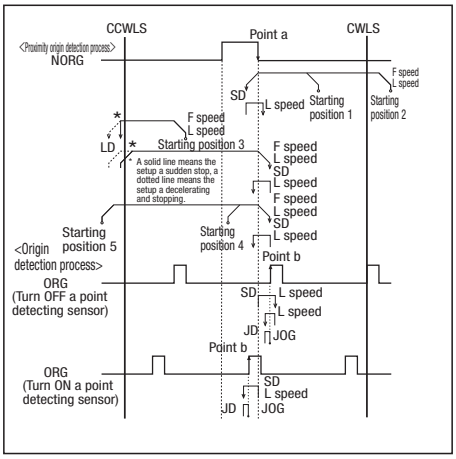

[Type2] Detect in the direction of CW and perform detected process for CCW edge (point a) of NORG signal.
Next detect on edge of CW side (point b) of ORG signal.

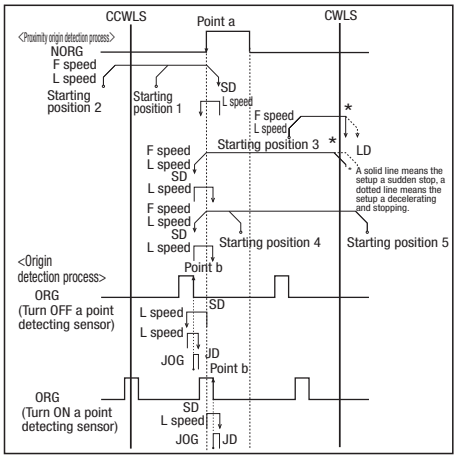

[Type7]
After finished type1, perform detected process for CCW edge (point c) of TIMING signal.

[Type8]
After finished type2, perform detected process for CW edge (point c) of TIMING signal.

Return to origin sequence ▶ P.1-201～

Adaptive driver

■ **Driver** ▶ P.1-205～

DC24V type input

Model	CVD507-K-A9	CRD5107P
Divisions	1～1/250 (16 steps)	1～1/250 (16 steps)

Adaptive stepping motor controller

■ **Controller** ▶ P.1-197～

Input power	General-purpose input/output port	Driver type (Divisions)	
		Normal (Full/Half)	Micro step (1~1/250 [16 steps])
AC100-240V	Without	DS102ANR	DS102AMS
	With	DS102ANR-IO	DS102AMS-IO
DC24V	Without	DS112ANR	DS112AMS
	With	DS112ANR-IO	DS112AMS-IO

DS112/102